Viceroy G.T.

Installation, Assembly and Servicing

Oil or Dual Gas Fired Boilers

Assembly and Installation Instructions for Ideal Viceroy Oil, Gas or Dual Fired heating boilers should be read in conjunction with the general technical data tables enclosed and any other technical publication supplied with the burner.

CAUTION. To avoid the possibility of injury during the installation, servicing or cleaning of this appliance care should be taken when handling edges of sheet steel components.

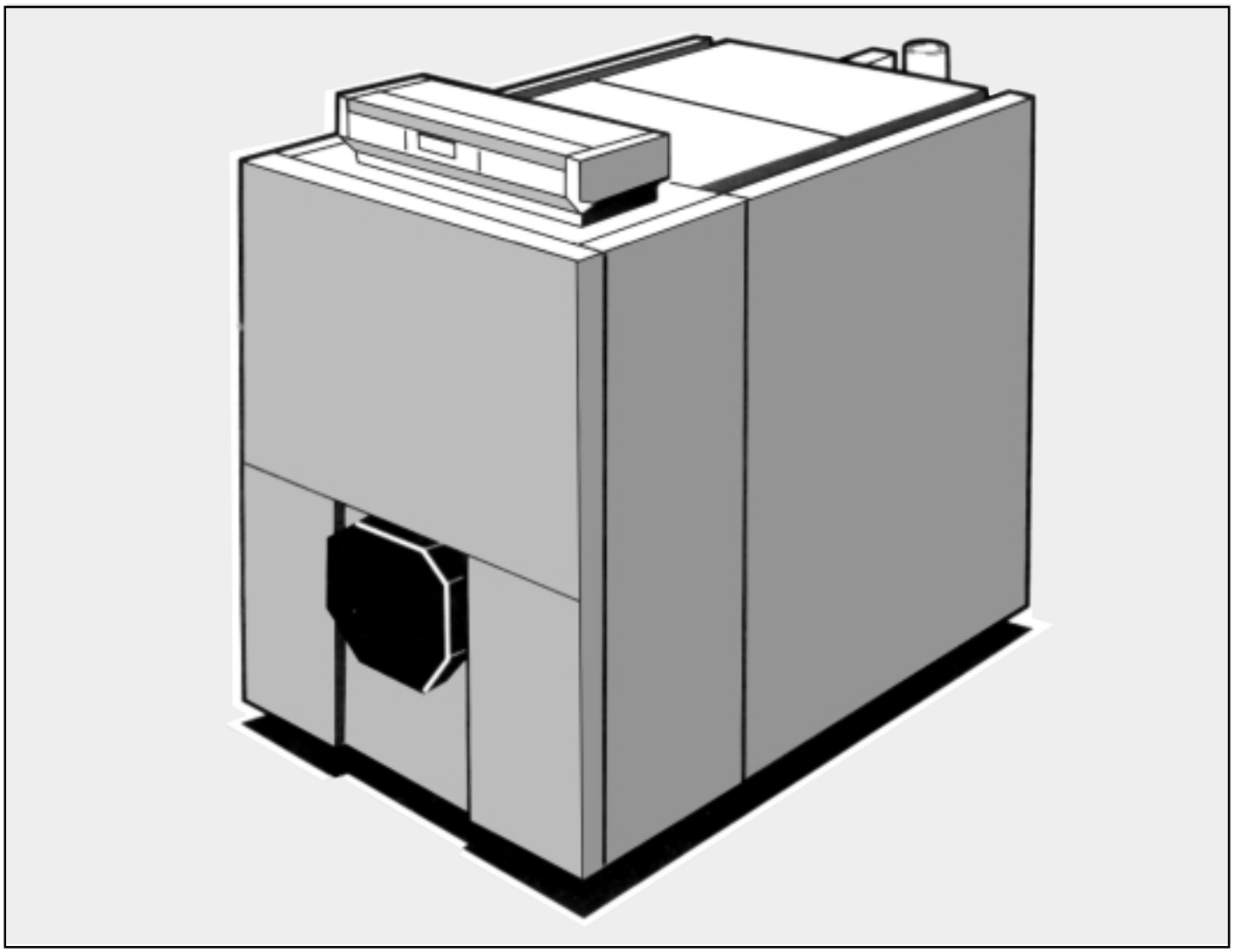

Ideal BOILERS

spares & parts online
IBASIS.co.uk©

CONTENTS

Boiler Models....4
Packing....5
Installation....6
Assembly/Hydraulic Connection....7
Filling the Installation....8
Desludging/Chimney Connection....9
Dimensions/Connection....10
Oil or Gas Connection....11
Control Panels....12
Start Up....16
Maintenance....19
Precautions....20
Data Table....21
Main Dimensions....22

INTRODUCTION

DUTY

The range of boilers is suitable for: combined indirect pumped domestic hot water and central heating systems; independent indirect pumped domestic hot water or central heating systems.

Fully pumped systems may be open vented or sealed.

The range of boilers is NOT suitable for:

1. Gravity DHW systems.
2. Gravity heating systems.
3. Direct domestic hot water supply.

FOUNDATION

The boiler must stand on a non-combustible floor (i.e. concrete or brick) which must be flat, level and of a suitable load bearing capacity to support the weight of the boiler (when filled with water) and any ancillary equipment.

If the boiler is mounted on a plinth then the dimensions must exceed the plan area of the boiler by at least 75mm on each side

GAS SAFETY (INSTALLATION AND USE) REGULATIONS, 1994

It is law that **all** gas appliances are installed and serviced by a CORGI registered installer in accordance with the above regulations. Failure to install appliances correctly could lead to prosecution. It is in your own interest, and that of safety, to ensure the law is complied with.

The installation of the boiler MUST also be in accordance with the latest I.E.E Wiring Regulations, local building regulations, bye-laws of the local water authority, the building regulations and the Building Standards (Scotland) and any relevant requirements of the local authority.

Detailed recommendations are contained in the following British Standard Codes of Practice:

BS. 6891	Low pressure installation pipes.
BS. 6798	Installation of gas fired hot water boilers of rated input not exceeding 60 kW.
BS. 5449	Forced circulation hot water systems.
BS. 5546	Installation of gas hot water supplies for domestic purposes (2nd Family Gases)
BS. 6644	Ventilation (for gas appliances of rated input exceeding 60 kW)
BS. 5440:2	Ventilation (for gas appliances of rated input not exceeding 60 kW)

GENERAL

The technical instructions for boiler installation given in the document must be scrupulously followed, otherwise the guarantee will be invalidated.

1 THE BOILERS COVERED BY THIS DOCUMENT

The Viceroy GT range of boilers is an automatic range of pressurised hot water boilers, connected to a chimney, to be fitted with an independent burner using domestic fuel oil or gas, with a working power rating from 175 to 780kW.

Boiler models:

VICEROY GT “DELUXE”: boiler with “DIEMATIC-m” integral electronic control panel. Used as the «master» boiler for installations of 2 or 3 boilers in cascade where the other boilers are fitted with an «E» control panel.

VICEROY GT “STANDARD”: boiler with “E” control panel: on option can be fitted a SV-matic weather compensator or a SVR module for domestic hot water priority. Used as a «slave» boiler for installations of two or three boilers in cascade where one is fitted with a “DIEMATIC-m” control panel.

VICEROY GT: boiler with standard control panel to be connected, if needed, to main control cabinet.

PACKING

Before installing your boiler, you can check with the chart below if you have all the component packages

Table 1 - Viceroy GT in bulk

Item	Box nr.	Viceroy 8	Viceroy 9	Viceroy 10	Viceroy 11	Viceroy 12	Viceroy 13	Viceroy 14
Underframe (dimensions according to model)		1	1	1	1	1	1	1
Front section		1	1	1	1	1	1	1
Normal intermediate section		5	6	7	8	9	10	11
Special intermediate section		1	1	1	1	1	1	1
Rear Section		1	1	1	1	1	1	1
Common accessories	IE 20	1	1	1	1	1	1	1
Accessories boiler in bulk (composition according to model)		1	1	1	1	1	1	1
Baffles	IE 30	1						
	IE 31		1	1				
	IE 32				1	1		
	IE 33						1	1
Inner body insulation *	IE 51	1						
	IE 53		1	1				
	IE 55				1	1		
	IE 57						1	1
Casing: common parts	IE 10	1	1	1	1	1	1	1
Casing: varying parts	IE 11			1			1	
	IE 12	1			1			1
	IE 13		1	1	1	2	2	2
	IE 14		1			1		
Wiring ducts	IE 41	1						
	IE 42		1					
	IE 43			1				
	IE 44				1			
	IE 45					1		
	IE 46						1	
	IE 47							1
Control panel -E -Standard	ID 22 or ID 24	1	1	1	1	1	1	1
Technical documents	IE 408	1						
	IE 409		1					
	IE 410			1				
	IE 411				1			
	IE 412					1		
	IE 413						1	
	IE 414							1

For optional equipment you may use with this boiler, see the current price list.

2 INSTALLATION OF THE BOILER

The minimum dimensions indicated on the following drawing must be respected to ensure good access around the boiler

Remark: To allow the inlet of the combustion air, the boiler room must be adequately ventilated, the section and the location must comply with local recommendations.

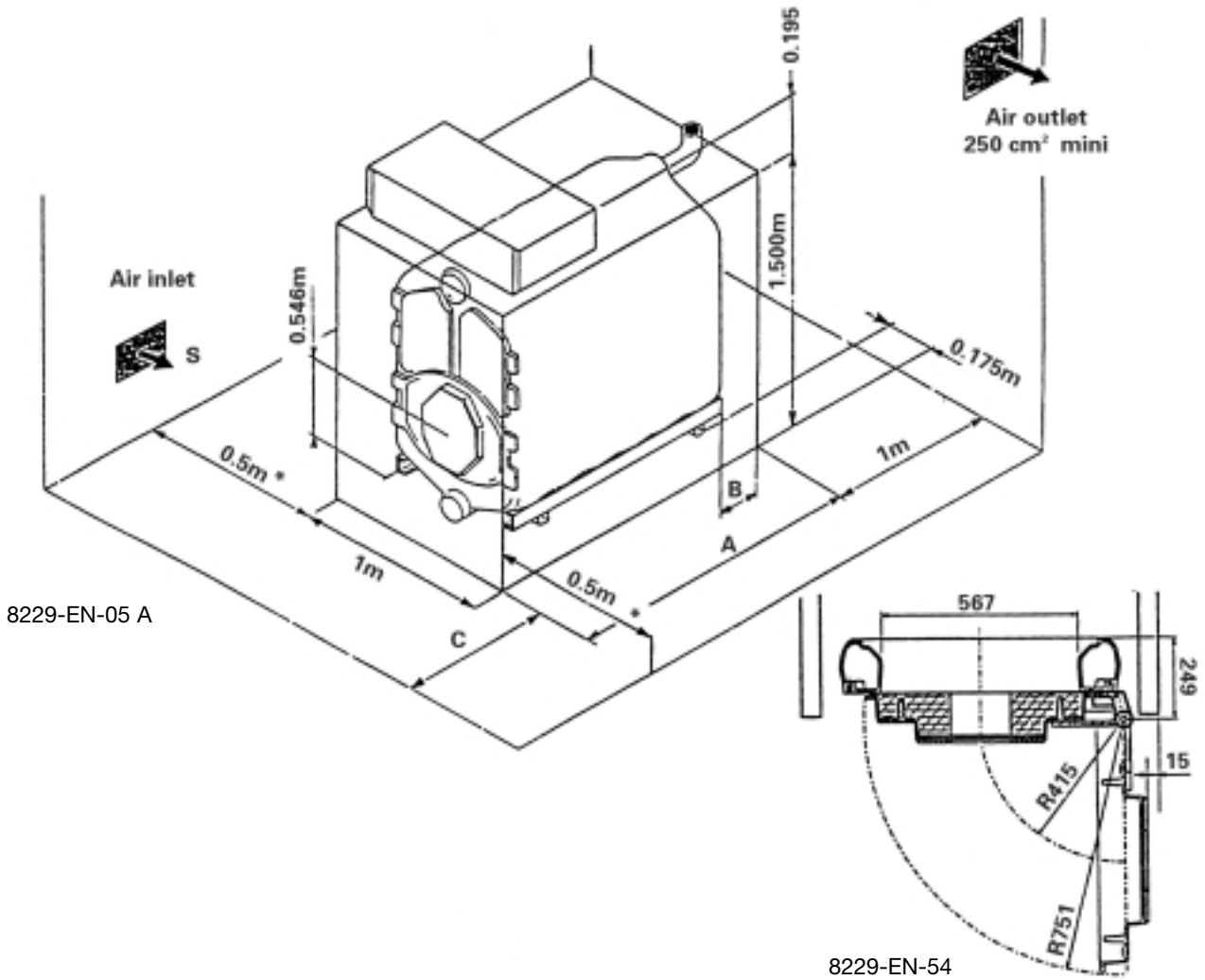

Burner door open

Sections	8	9	10	11	12	13	14
Dimensions A mm	1505	1665	1825	1985	2145	2305	2465
Dimensions B mm	130	-40	120	-40	120	-40	120
Dimensions C m	1.5	2	2	2	2.5	2.5	2.5
Section cm² S	840	960	1090	1240	1390	1550	1710

* Caution: Pay particular care to the space required for the boiler when the door is open. For an installation of several boilers side by side, these dimensions need to be modified.

Ventilation General

Detailed recommendations for air supply are quoted in BS. 6644. The ventilation requirements in this gas fired boiler standard are also valid for oil fired boilers of the same heat input.

Remark: We draw your attention to the risks of corrosion of boilers which are installed in or near rooms in which the atmosphere can be polluted by chloride or fluoride substances.

E.g. : industrial buildings (solvents), refrigerating machines, etc...

In these cases, we cannot provide a warranty.

3 ASSEMBLY

For the assembly of the boiler, refer to the removable leaflet in the middle of the instruction book.

4 HYDRAULIC CONNECTION

Dimensional information required

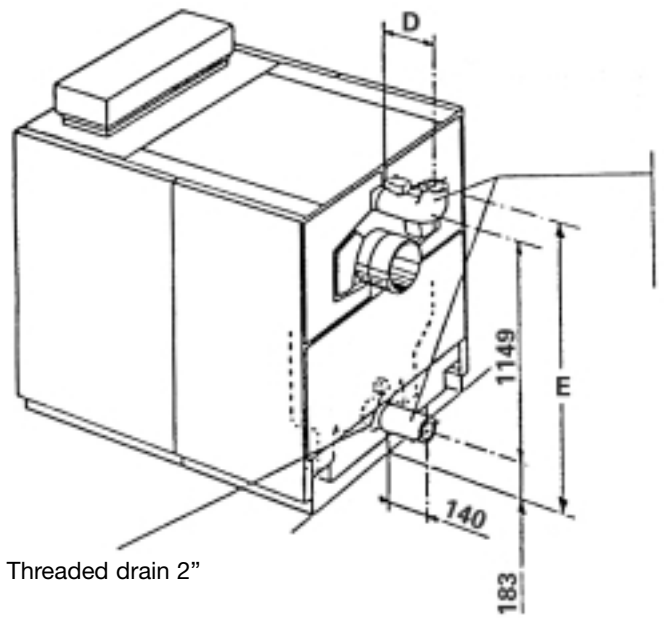

Water flow/return tapping
GT 8 to 10: Ø 2”1/2
GT 11 to 14: Ø 3”

Threaded drain 2”

8229-EN-06

	Viceroy GT 8 to 10	Viceroy GT 11 to 14
D mm	235	254
E mm	1427	1447

Installation Recommendations

The installation of the boiler MUST be in accordance with the following British Standards and Codes of Practice:

BS. 799 Pts. 4,5,6 & 7	Oil Burning Equipment
BS. 5410 Pts. 2 & 3	Installations for Space Heating and Hot water Systems
BS. 5449 Pt.1	Hot Water Systems
BS. 5854	Flues and Flue Structures in Buildings
BS. 5885 Pt.1	Gas Burners - with outputs of 60kW upwards
BS.6644	Installation of Gas Fired Boilers
BS.6880	Low Temperature Hot Water Heating Systems
BS.6891	Low Pressure Gas Pipework
British Gas Publication No. IM.11	Industrial Gas Fired Boilers and Air Heaters

The following must be confirmed with:
Current Building Regulations and Clean Air Act
Water Authority Regulations
Local Authority Regulations and Regional bylaws
Gas Safety Regulations

Any Special regional requirements of local Electricity and Gas undertaking.
Fire Service and Insurance Company requirements.
All electrical wiring MUST comply with the current I.E.E. regulations for the electrical equipment of buildings. In the interests of safety, a competent installer should be employed to effect the installation of the appliance. Manufacturer’s notes must NOT, in any way, be taken as over riding statutory obligations.

Example of installation of a Viceroy GT boiler with production of domestic hot water through independent calorifier(s)

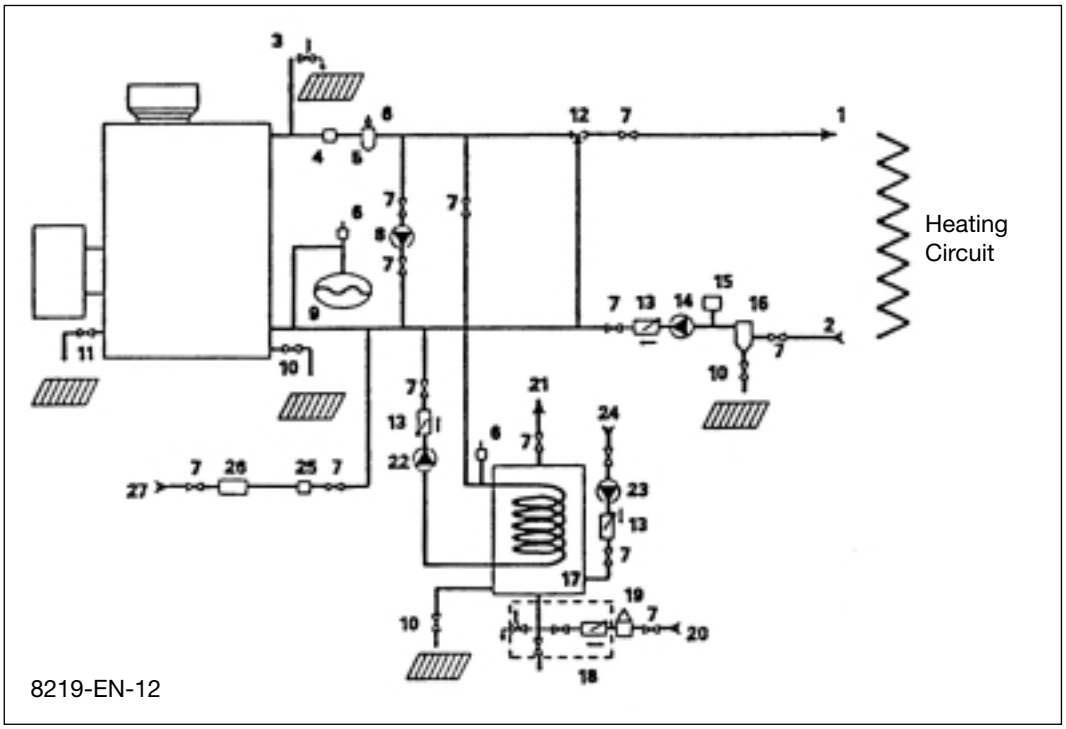

1. Water flow flange
2. Water return flange
3. 4 bars safety valve + manometer*
4. Flow control device
5. Air separator
6. Air vent
7. Valve
8. Recycling pump
9. Expansion tank
10. Drain valve
11. Desludging valve
12. Mixing valve
13. Check valve
14. Circulating pump
15. Pressure gauge
16. Sludge decantation pot (particularly recommendation for older installations)
17. Independent calorifier
18. Safety unit, set and sealed at 7 bars with over flow
19. Pressure reducer (if system pressure >5.5bars)
20. Domestic cold water inlet
21. Domestic hot water flow
22. Calorifier heating pump
23. Domestic water circulating pump (optional)
24. DHW circuit return
25. Water meter (eventually)
26. Water treatment when TH > 25°
27. Heating system filler (with circuit breaker in accordance with regulations).

* 6 bars maxi

FILLING THE INSTALLATION

The boiler may be filled by the drain tap. Filling should be done at a slow flow rate in order to purge all the air contained in the boiler by the upper point of the installation. Filling is always done with circulating pumps stopped.

General

Recommendations relating to the water system are contained in BS.5449 Pt.1, BS5401 Pt.2. and BS.6880.

MOST IMPORTANT: start up after partial or total drain of the installation:

If all air does not purge naturally via an opened expansion system, then in addition to automatic airvents able to ensure continuous automatic elimination of air from the system while it is running, the installation must also include manual airvents so that all upper points of the installation can be vented and so that when the installation is full of water it can be verified that all air is eliminated before the boiler are fired.

DESLUDGING

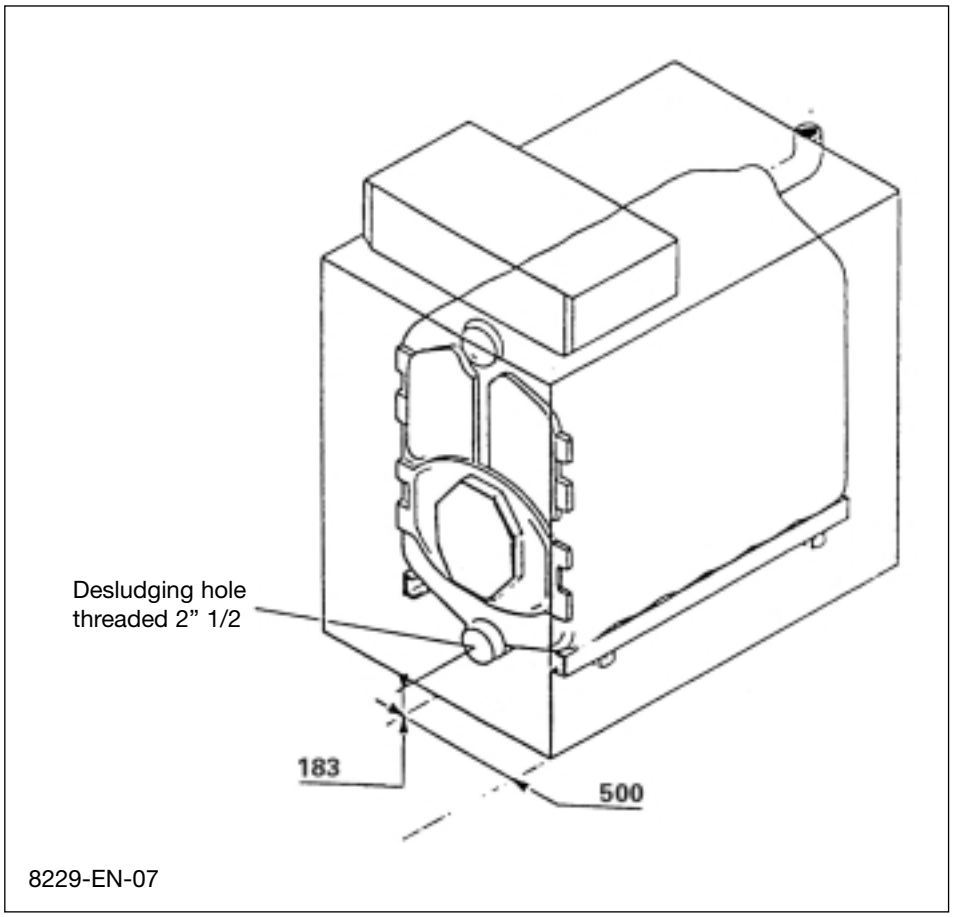

A desludging hole of Ø 1”1/2 supplied with a plug is provided in the lower part of the boiler to enable sludge to be drained out. The installer can fit 1/4 turn valve.

Draining sludge involves the loss of significant quantities of water from the system, which must be refilled after the procedure.

Comment: Any replacement of boilers in an old system must include a careful washing out of the full installation. Fit a sludge trap on the return and close to the boiler.

5 CHIMNEY CONNECTION

As the Viceroy GT is a high performance boiler, the temperature of the flue gases may be less than 160°C. The installer ought to take all precautions (padding out, casing, T for draining condensation) in order to avoid deterioration of the chimney.

If necessary, the baffles of the 4 upper smoke chambers may be partially removed with a resulting increase in temperature of the flue gases.

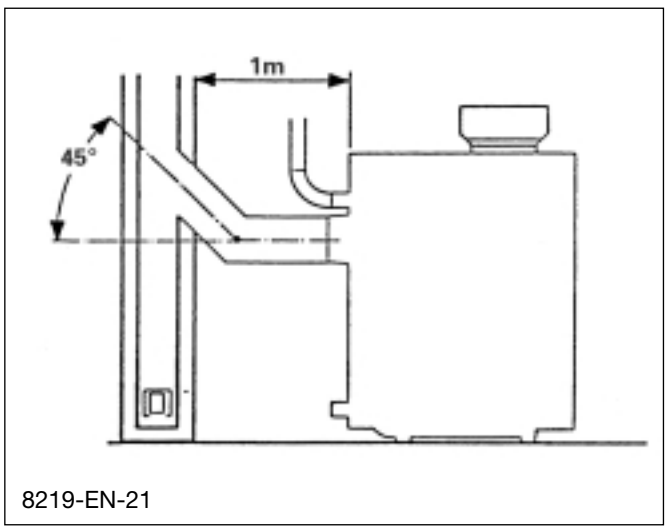

DETERMINING THE FLUE

To size the height and cross section of the chimney, refer to the regulations currently in force. GT boilers are boilers with pressurised combustion chambers and the pressure of the outlet must not exceed 0 mbar unless special precautions are taken to seal carefully between the outlet and the flue.

The installer should provide a measuring point (Ø 10mm hole) on the flue for burner adjustment and control of the combustion.

Detailed recommendations, relating to the design of flues for GAS fired appliances are quoted in BS.6644 and British Gas Publication No. IM 11., whilst BS.5410 Pt.3 similarly applies OIL fired burners.

DIMENSIONAL INFORMATION NEEDED FOR CONNECTION

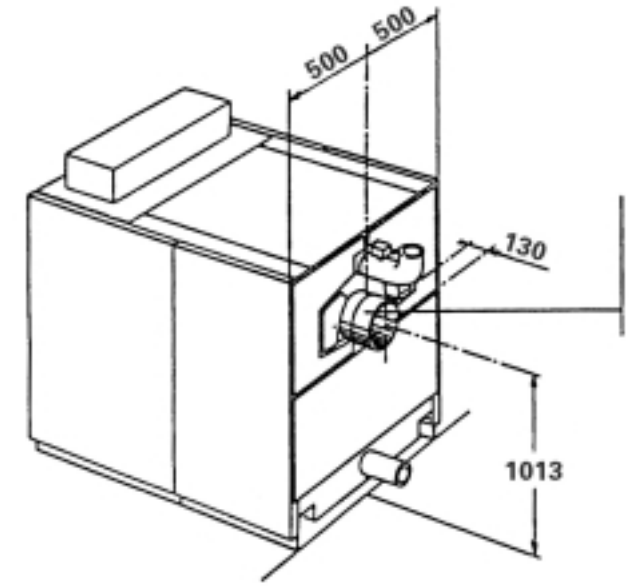

Chimney connection (outer Ø)

VICEROY GT 8 to 10: Ø 250

VICEROY GT 11 to 14: Ø 300

8229-EN-08

CONNECTION

Connection should be made according to regulation and practice by using a sealed pipe in a material able to withstand hot combustion gases and possible acidic condensation. The connection should be removable and present minimal loss of load, it means it should be as short as possible and without sudden change of cross section.

Its diameter should always be at least equal to that of the boiler outlet, 250mm for the 8, 9 and 10 section boilers and 300mm for the 11, 12, 13 and 14 section boilers.

6 OIL OR GAS CONNECTION

See specific technical information supplied with the burner.

Caution: The baffle at the head of the burner must be in line with the burner door insulation level.

Drilling Ø for burner door (on request).

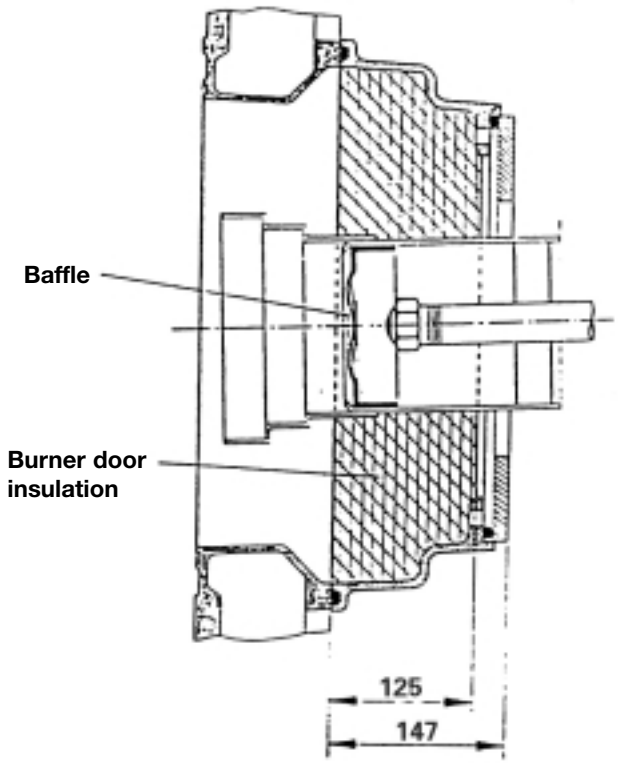

8229-EN-10

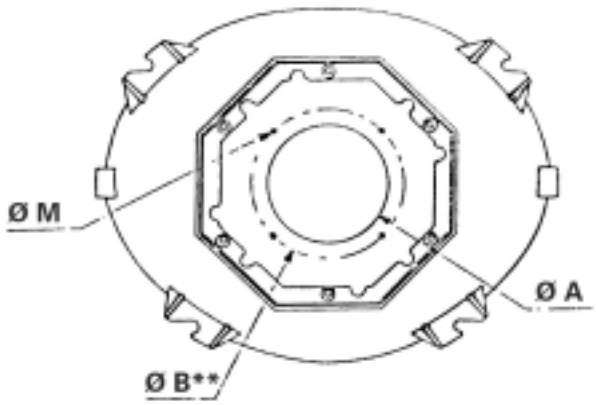

** maxi diameter for fixing:
Ø B maxi = 290 mm
or Ø B maxi = 330 with 4 fixings at 15° or at 45°

Ø A	135	175	190	240	250	290
Ø B**	170	200	220	270	325	330
Ø M	8	8	10	10	14	12

8229-EN-09

Gas Supply

The gas supply MUST be sized in accordance with British Gas recommendations and be fabricated in compliance with CP.331 Pt.3 any Local Gas Board installation standards.

The Local Gas Board should be contacted, at a stage prior to actual installation, for any advice or information required. Details and advice, relating to the use of L.P.G. for firing the IDEAL VICEROY GT range of heating boilers, are available on request to Caradon Ideal Ltd.

Oil Storage Tank

The oil storage tank, oil supply pipe and connections to the burner unit MUST comply with the requirements of BS.779 and CP.5410.

The installation should conform to the recognised standards of good practice in the trade and comply with the relevant Codes of Practice, Building Regulations and Local Authority, Fire and insurance requirements.

7 ELECTRICAL CONNECTIONS TO THE CONTROL PANEL

CAUTION: The connection must be carried out by a qualified professional.

As the electrical wiring has been carefully checked in the factory, the internal connections of the control panel must not be modified under any circumstances.

The electrical connections of the boiler must conform with the IEE wiring regulations in force and with the specifications shown on the electrical drawings provided with the equipment, and the instructions given below.

The equipment should be supplied by a circuit using an omnipolar circuit breaker with an opening gap greater than 3mm.

DELUXE - control panel

All the connections are made to the 2 terminal blocks provided for this purpose in the control panel.

The connection cables are routed towards the front via the 2 cut outs in the panel behind the boiler, and run in the wiring duct towards the panel via the two rectangular cut outs of the front top panel. The senor cables run on one side, the cables carrying the 230 V supply on the other and are supported on both sides by plastic clips.

Caution: The sensor wiring must be kept separate from the other circuits. Inside the boiler, use the cable runs. Outside the boiler, 2 wiring ducts at least 10cm apart should be used.

Wiring is secured in the control panel using cable clips (6 cable clips are supplied in a separate packet); these are to be fitted into the control panel base - see diagram below.

Caution: The maximum current which may be switched by the outlet is 2 A, cos φ = 0.7 (= 450 W at he motor of 0.5 Méch., hp signal current less than 16 A), if the charge exceeds one of these values, the control must be relayed by means of a contractor. The outlet group is protected by a 5 A fuse.

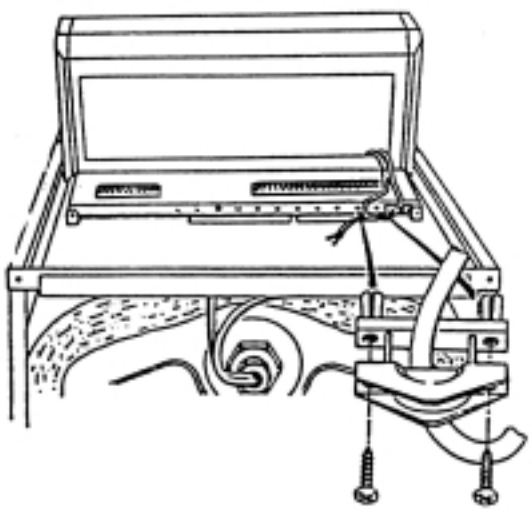

8229-EN-44

Fitting the SVR option

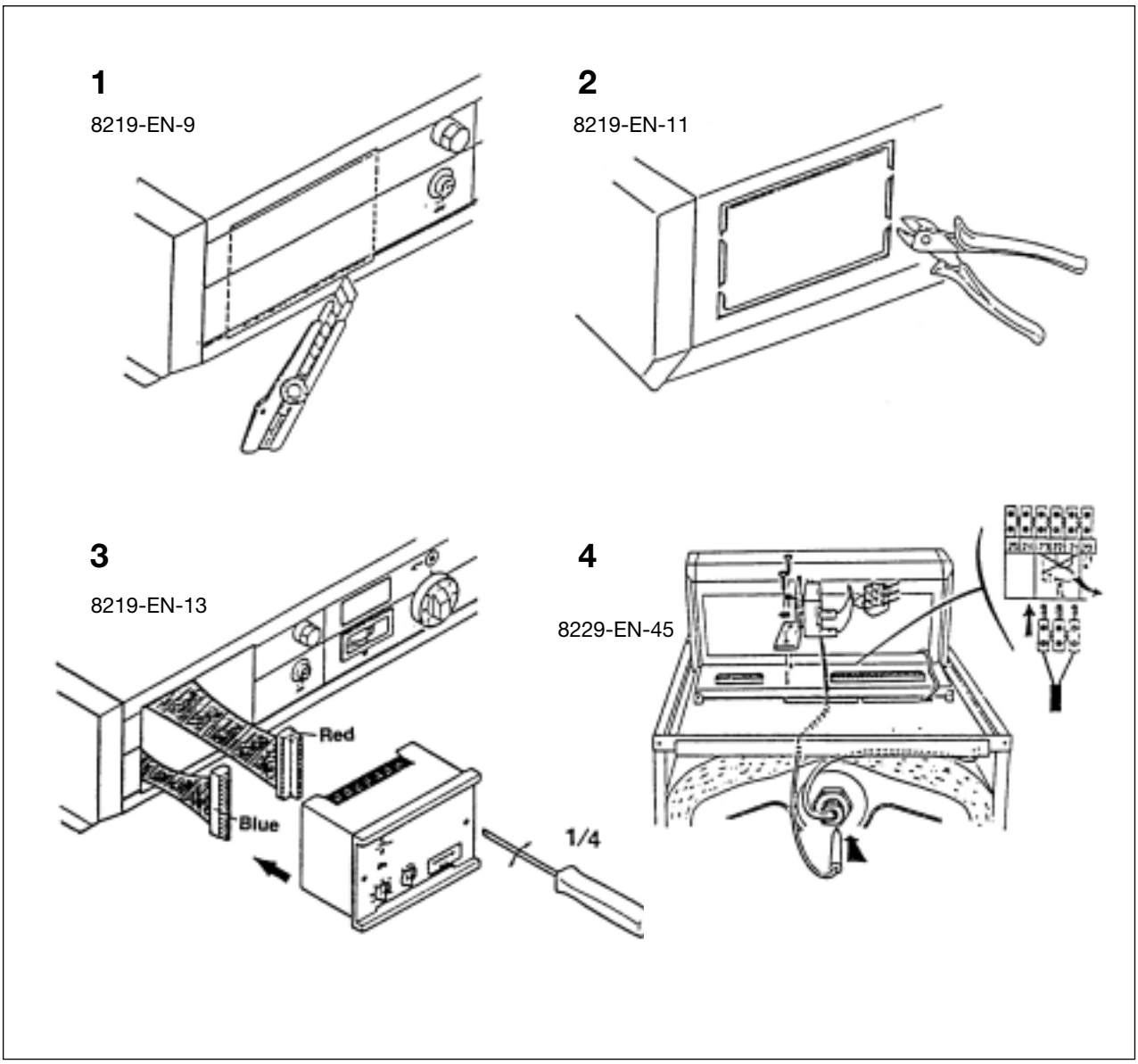

The SVR option box is to be fitted in the front part of the control panel. To do this:

1-2. Remove the blank by cutting the surface with a stanley knife following the black line and by breaking the perforations in the steel plate behind with a pair of snips.

3. Connect the two connections, situated behind the blank, to the back of the SVR unit: blue connector to the blue plug, red connector to the red plug.

4. Locate the unit by its front and fix it using the two screws sited in the front part of the equipment (1/4 turn clockwise)

The limit thermostat supplied with the SVR option is to be fitted in the control panel in the place provided for this purpose, using the two self tapping screws supplied. The 3 pin thermostat male terminal is to be connected in the position provided on the 25 pin terminal block after having taken out the bridge; the thermostat bulb is to be located in the small pocket in the body of the boiler.

Fitting an SV-matic weather compensator

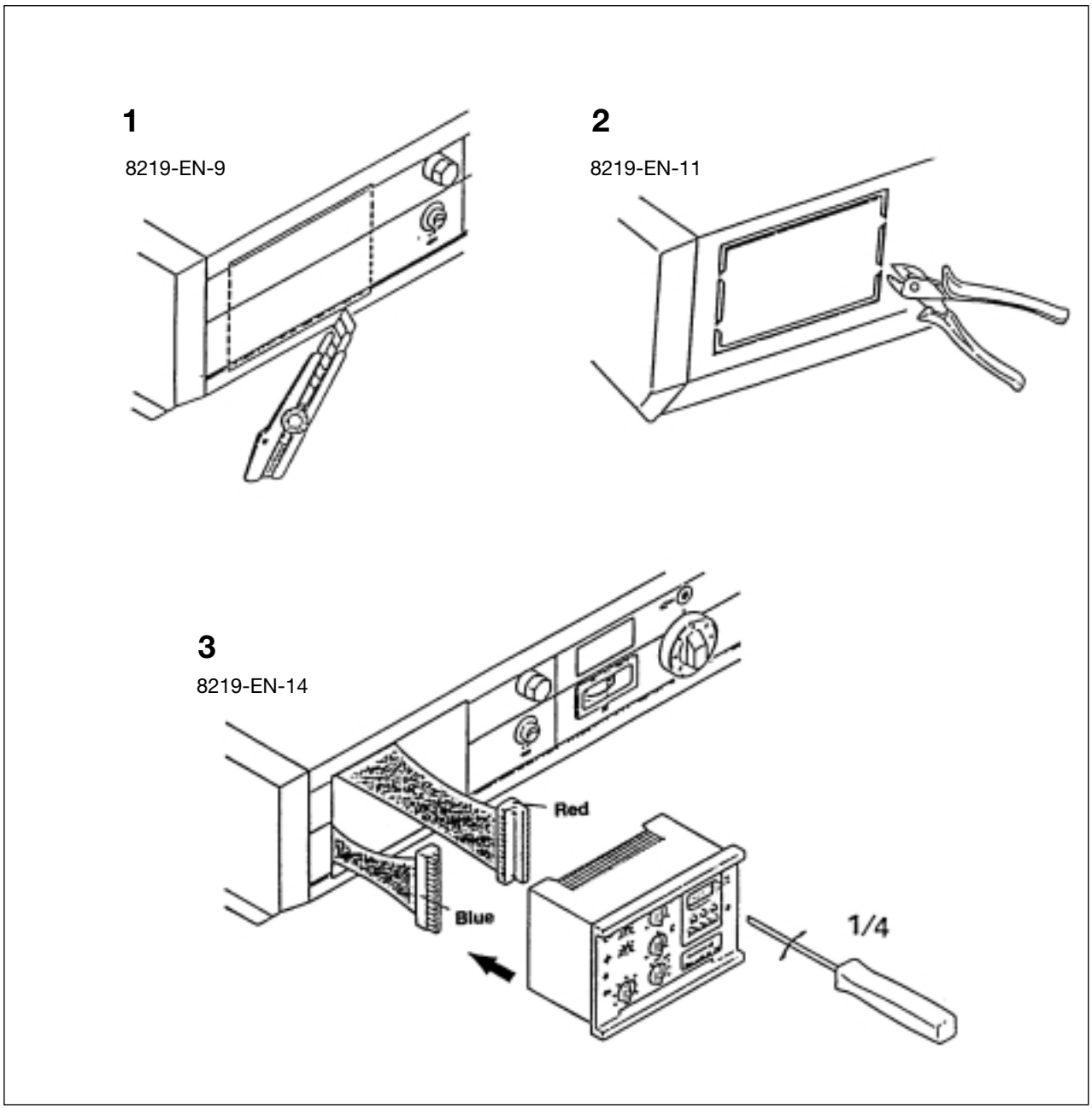

The SV-matic weather compensator is fitted in the front part of the control panel. To do this:

1-2. Remove the blank by cutting the surface with a stanley knife following the black line and by breaking the perforations in the steel plate behind with a pair of snips.

3. Connect the two connections, situated behind the blank, to the back of the SVR unit: blue connector to the blue plug, red connector to the red plug.

4. Locate the unit by its front and fix it using the two screws sited in the front part of the equipment (1/4 turn clockwise)

Caution: When a two stage SV-matic weather compensator type 322 DB is fitted, the resistor and the bridge respectively fitted between terminals 34 and 37, and 34 and 35 must be removed.

Burner connection

The burner control circuit generally a 2-stage burner, is fitted with 2 European 7 and 4 pin plugs supplied with the boiler, which simply need to be fitted into the female plugs supplied with the burners. In the case of a burner not fitted with female plugs, remove the plugs on the burner cable from the boiler and connect the leads to the terminal bar on the burner.

STANDARD CONTROL PANEL

The connections are made on the terminal strip in the control panel, accessible by opening the panel

(3 screws at the back - see diagram).

The connection cables are directed towards the front via the two cut outs in the rear panel of the boiler, and routed in the cable run to the control panel via the 2 rectangular cut outs in the front top panel.

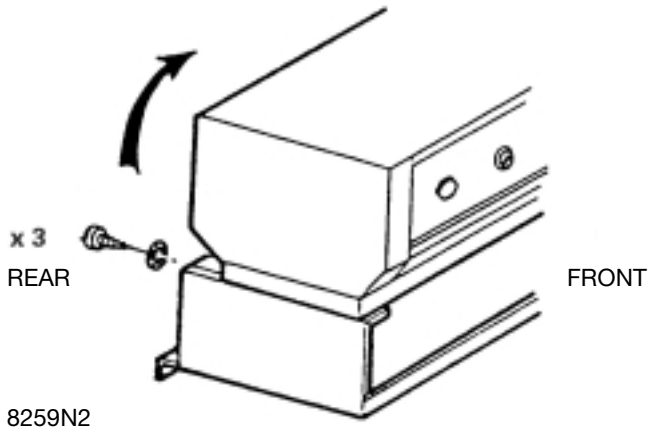

8 START UP

DELUXE (option) - control panel
Presentation of the control panel

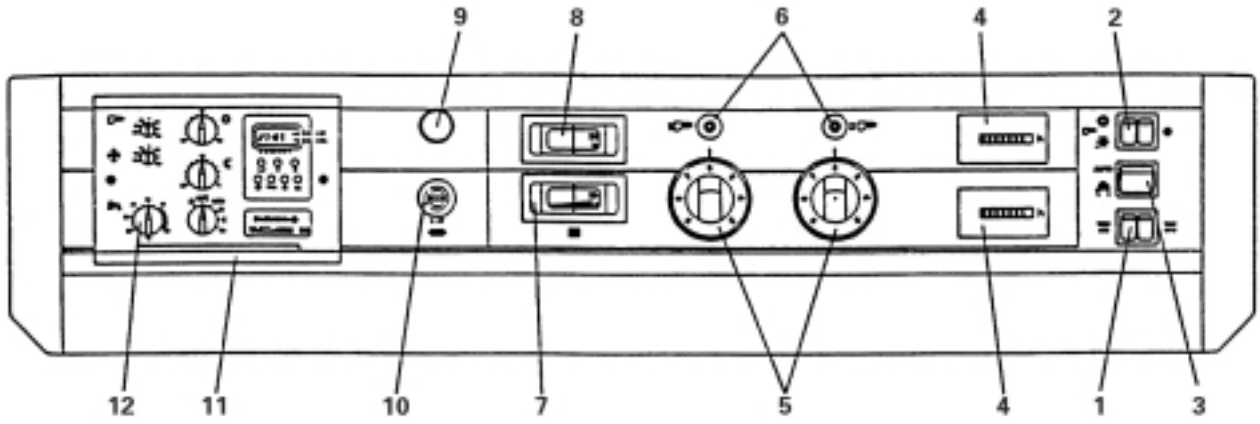

8219-EN-5 B

1. Double STB-STW switch: To test the safety thermostat, press simultaneously on the two switches STB and STW (put the summer/winter switch 2 ( ) in

   «Summer position» “ ”)

2. Burner/Heating pump double switch: Switch controlling the burner and heating pump.

   - In «Winter» position : the heating and the domestic hot water are on.

   - In «Summer» position , only the domestic hot water is on (if a calorifier is connected).
     Where an SV-matic weather compensator is fitted or for a series installation, the two switches must be in

     «Winter» position .

3. Auto/Manual switch:

   - AUTO: Automatic position, the position to be used in normal operation for boilers fitted with an SV-matic weather compensator or with an SVR module. The temperature of the boiler is adjusted by the control.

   - Manual : Manual position, the position to be used for boilers not fitted with an SVR module. The temperature of the boiler is adjusted by the first and second stage boiler thermostats 5. This position can be used to test the burner on an installation fitted with an SV-matic weather compensator.

4. Location for a hourrun meter if required for first or second stage

5. Boiler thermostat for first or second stage:
   Graduated from 30°C to 90°C.

However, a pre-set integral temperature stop limits the temperature to 80°C. This stop can be changed if necessary. To alter it, remove the thermostat button by pulling below and with pliers relocate the stop in the hole according to the temperature limit required.

Important:Boiler thermostats must always be at maximum stop in the case where an SV-matic weather compensator is fitted or a boiler fitted with a «DIEMATIC-m» electronic control panel.

6. Indicator lamps for 1st and 2nd stage: these only light if the thermostat concerned or the control are calling for heat and the safety contact is closed.

7. Boiler thermometer

8. Location for possible smoke thermometer

9. Safety thermostat with manual reset
   (cut temperature: 100°C)

10. Fuse 5 AT.

11. Location for SV-matic weather compensator or the possible SVR option (here SV-matic 232 DB shown in place)

For boilers connected to a domestic hot water calorifier

12. Control rheostat for the temperature for the DHW sited on the SVR box or the type B SV-matic weather compensator (graduated from 20° to 80°C - adjustment advised: 50°C)

Operating instructions of the Deluxe control panel

Regulation of the boiler:

The boiler is controlled either by the boiler thermostats or by the SV-matic weather compensator (in option).

For boilers fitted with an SV-matic weather compensator the temperature of the boiler is controlled by the action of the regulator on the burner according to the external temperature. The boiler thermostats will be then set to maxi. Operating safety is ensured by the safety thermostat with manual reset.

For boilers fitted with an SV-matic weather compensator acting on a valve, heating temperature is adjusted by the regulator on a motorised mixer valve according to the outside temperature.

Regulation of domestic hot water

With SVR option or SV-matic type B:

The temperature of the domestic hot water is adjusted by a rheostat 12 located on the SVR or SV-matic weather compensator. When the domestic hot water is heated, the burner and load pump start while the heating accelerator stops; the temperature of the boiler is then regulated by the limit thermostat incorporated in the SV-matic weather compensator or mounted on the SVR option (this thermostat is pre-set from factory at 80°C)

Once the hot water demand is satisfied, the burner stops and the load pump continues to operate for 4 minutes (timing adjustable from 30 seconds to 15 minutes). This enables the residual calories within the body of the heater to be used, and to complete the heating of the calorifier particularly in summer.

Start up

Before starting the boiler, check that the installation is properly filled with water.

Make the start up adjustments in the following chronological order:

Put the boiler thermostats 5 to the desired position (altering the position of the stop if necessary).

Important: For boilers fitted with an SV-matic weather compensator adjust the boiler thermostats to max.

Put the domestic hot water thermostat 12 to the desired temperature (SVR or SV-matic options). The temperature of the hot water thermostat must always be lower than the setting on the first stage boiler thermostat (or the limit thermostat in the unique case of the SVR option).

Put switch 3:

Either on manual position ✋ : Boilers not fitted with an SV-matic weather compensator.

Or on automatic position “AUTO”: Boilers fitted with an SV-matic weather compensator.

Check that the safety thermostat 9 is not tripped. To do this, unscrew the hexagonal cap and using a suitable screwdriver, press on the reset button.

Put the burner/accelerator switch 2 on winter position “❄”.

IMPORTANT: In the absence of other settings. it is advised never to set the boiler thermostat under mark 4 (40°C) so as to avoid all risk of condensation inside the boiler.

Standard control panel presentation

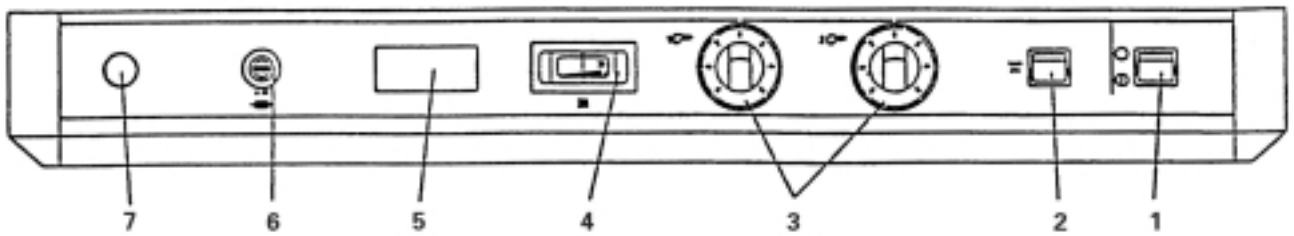

8219-EN-5

1. Stop/Start switch for the burner
2. STB test switch: momentary action to test the safety thermostat
3. Boiler thermostat first and second stage: Graduated from 30° to 90°C. Integral pre-set stop limits the maximum temperature to 80°C. This stop can be adjusted if necessary. To adjust it, remove the thermostat button by pulling and use pliers to move the stop to the hole according to the temperature desired.

The second stage thermostat must always be set to a lower value than the first stage thermostat.

4. Boiler thermometer
5. Location for possible smoke thermometer
6. 5 AT fuse
7. Safety thermostat with manual reset (factory set at 100°C)

Operating principle of the control panel

Adjustment and regulation of the boiler is done by boiler thermostats or by adjustments on the external control unit, if there is one. Operating safety is ensured by the manual reset safety thermostat.

Start up

Put the boiler thermostat 3 on the desired position (alter the stop position if necessary). Where a control unit is fitted, see informations supplied with this control unit.

Check that the safety thermostat 7 is not tripped. To do this, unscrew the hexagonal cap and using a suitable screwdriver, press on the reset button.

Put the burner switch 1 on run

Important: in the absence of other settings, it is advised never to set the boiler thermostat lower than mark 4 (40°C) so as to avoid all risk of condensation inside the boiler.

9 MAINTENANCE

Boiler

It is not advisable to drain an installation, except in case of absolute necessity. Check regularly the water level of the installation and top it up if necessary, avoiding a sudden inlet of cold water into the hot boiler.

This operation can only be done a few times a year; otherwise, look for the leakage and remedy it without delay.

The good performance of the boiler depends on its degree of cleanliness.

Cleaning of the boiler must be carried out as often as required and at least, as the chimney once a year or more, according to the regulations in force. The following operations are always carried out with the boiler and **the power supply shut off.**

Cleaning of the flue gas circuit:

For this purpose:

- unhook the front cover,
- open the sweeping doors (upper doors) by unscrewing the 3 lock nuts (19mm spanner)

- remove the baffles
- using the brush supplied, carefully sweep the 8 flue ways
- also brush the baffles and the front face
- if possible use a vacuum cleaner
- put the baffles back in place **(pay attention to their direction)**
- shut the door

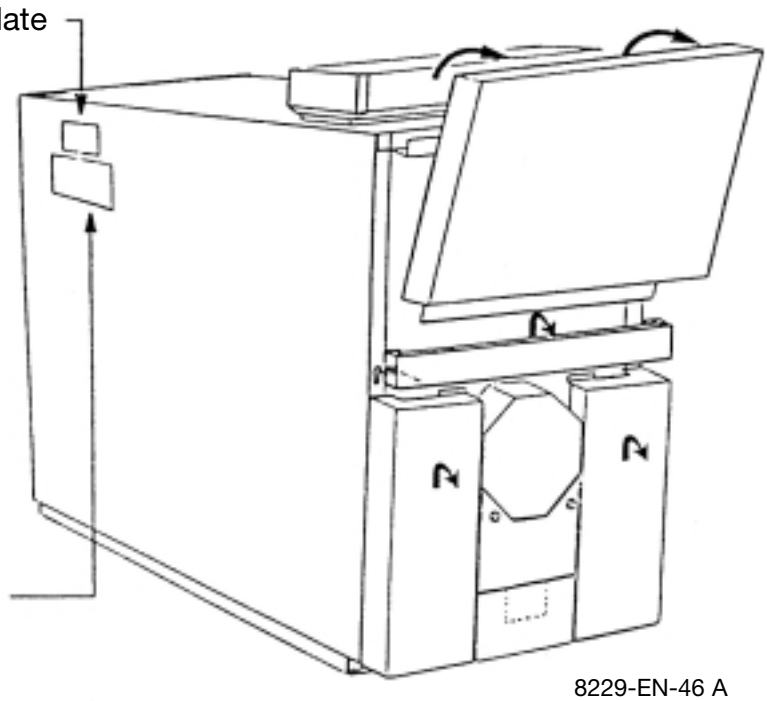

8229-EN-46 A

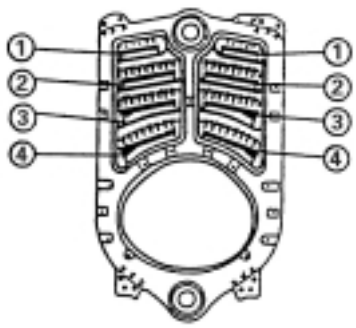

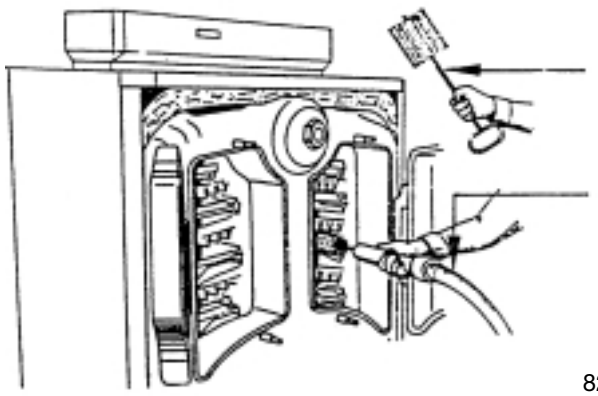

8229-EN-28

Baffles (per flue way)	GT 8	GT 9-10	GT 11-12	GT 13-14
Upper (1)	8229-0010 then 8229-0022	2x 8229-0010	2x8229-0010 then 1x8229-0022	3x 8229-0010
Middle (2)	8229-0011 then 8229-0023	2x 8229-0011	2x8229-0011 then 1x8229-0023	3x 8229-0011
Lower (3) or (4)	8229-0012 then 8229-0024	2x 8229-0012	2x8229-0012 then 1x8229-0024	3x 8229-0012

Maintenance of the combustion chamber

- open the burner door (lower door) by unscrewing 4 lock nuts (19mm spanner)
- brush the inside of the combustion chamber
- using a vacuum cleaner, vacuum up the soot deposits accumulated in the combustion chamber
- close the door and replace the front cover

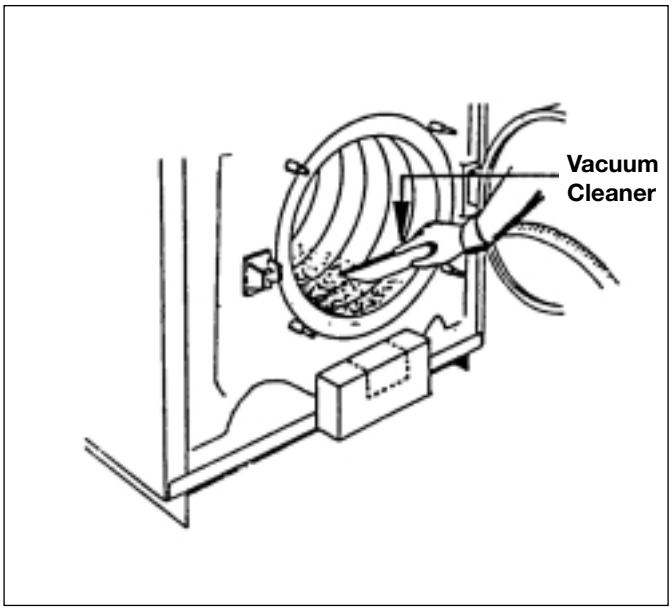

Cleaning the smoke box (flue hood)

For this purpose:

- remove the left and right hand sweeping covers of the smoke box (2 H12 nuts + washers - 19mm spanner) and remove the soot using a vacuum cleaner
- replace the sweeping covers

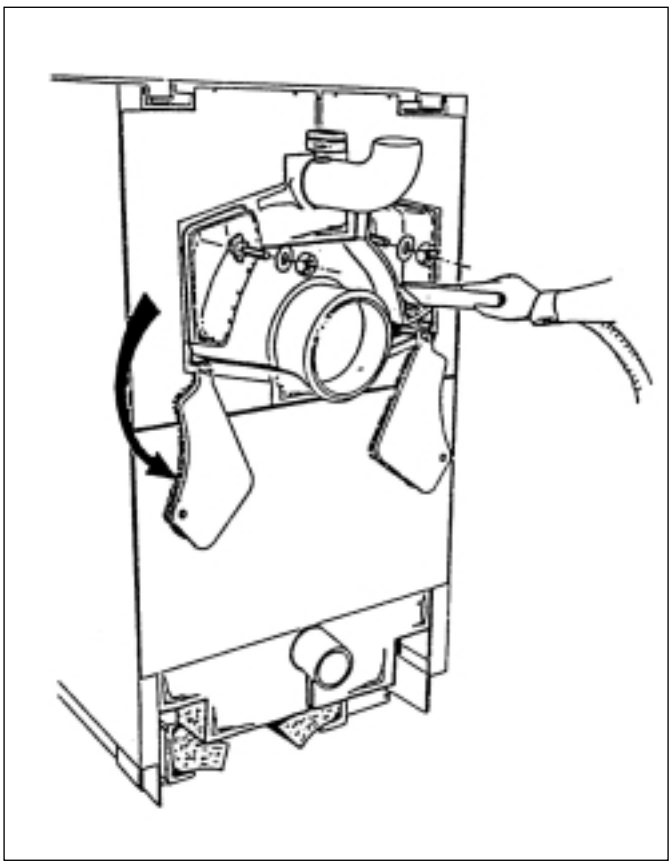

Precautions to be observed in case of very long stop of the boiler

- The boiler and the chimney must be carefully swept
- Shut the boiler doors to avoid any air flow inside
- If the boiler is going to be stopped for several months, we also advise removing the flue connection off the nozzle and to close it with a cover
- In case of stop of the heating in winter leading to risks of freezing, we advise the use of a concentrated antifreeze agent to prevent the heating water from freezing. Otherwise, completely drain the installation

General Data

Boiler Size		8	9	10	11	12	13	14
Maximum Heat Output	kW	390	450	540	600	670	720	780
	Btu/h x 10^3	1,330	1,535	1,842	2,047	2,286	2,456	2,661
Minimum Heat Output	kW	300	390	450	540	600	670	720
	Btu/h x 10^3	1,024	1,330	1,535	1,842	2,047	2,286	2,456
Combustion Chamber Volume	m^3	0.31	0.35	0.39	0.44	0.48	0.52	0.57
	ft^3	10.9	12.5	13.9	15.5	16.9	18.5	19.9
Flue Way Content	m^3	0.56	0.64	0.71	0.78	0.86	0.93	1.01
	ft^3	19.8	22.5	25.1	27.8	30.4	32.9	35.6
Boiler Water Content	l	366	409	452	495	538	581	624
	gal	80.5	89.9	99.4	109	118.4	127.8	137.3
Hydraulic Resistance at 15k	mbar	17	26.5	40.8	45.3	56.4	68.8	86.8
	in.w.g.	6.8	10.6	16.3	18.1	22.5	27.5	34.7
Combustion Chamber Resistance	mbar	1.1	1.5	2	2.5	2.5	2.5	3.5
	in.w.g.	0.44	0.6	0.8	1	1	1	1.4
Boiler DRY weight less burner unit	kg	1,470	1,650	1,830	2,010	2,190	2,370	2,550
	lb	3,240	3,637	4,034	4,431	4,828	5,225	5,622

Oil Firing Data

Boiler Size		8	9	10	11	12	13	14
Minimum Oil Rate	l/h	39.71	45.85	55.02	61.13	68.26	73.36	79.47
	gal/h	8.73	10.08	12.1	13.45	15.02	16.14	17.5
Maximum Flue Gas Volume	l/sec	247.3	285.5	342.6	380.8	425.2	456.8	495.5
	ft^3/min	524	605	726	807	901	968	1,050

Gas Firing Data

Boiler Size		8	9	10	11	12	13	14
Minimum Gasl Rate	m^3/h	40.5	46.7	56.1	62.3	69.6	74.8	81
	ft^3/h	1,430	1,649	1,981	2,199	2,457	2,641	2,860
Maximum Flue Gas Volume	m^3/sec	0.24	0.28	0.33	0.37	0.41	0.45	0.48
	ft^3/min	8.47	9.88	11.65	13.06	14.47	15.8	16.9

Data notes

Fuel rates and flue gas data relates to maximum outputs ratings
Gas firing data relates to the use of NATURAL GAS ONLY
Details for the use of LPG are available, on request, to Caradon Ideal Ltd
The gas rate at calorific values differing from the standard quoted above may be calculated by direct proportion
CALORIFIC VALUE; 38.5 MJ/m^3 (1035 btu/ft^3)

Main dimensions
Viceroy GT

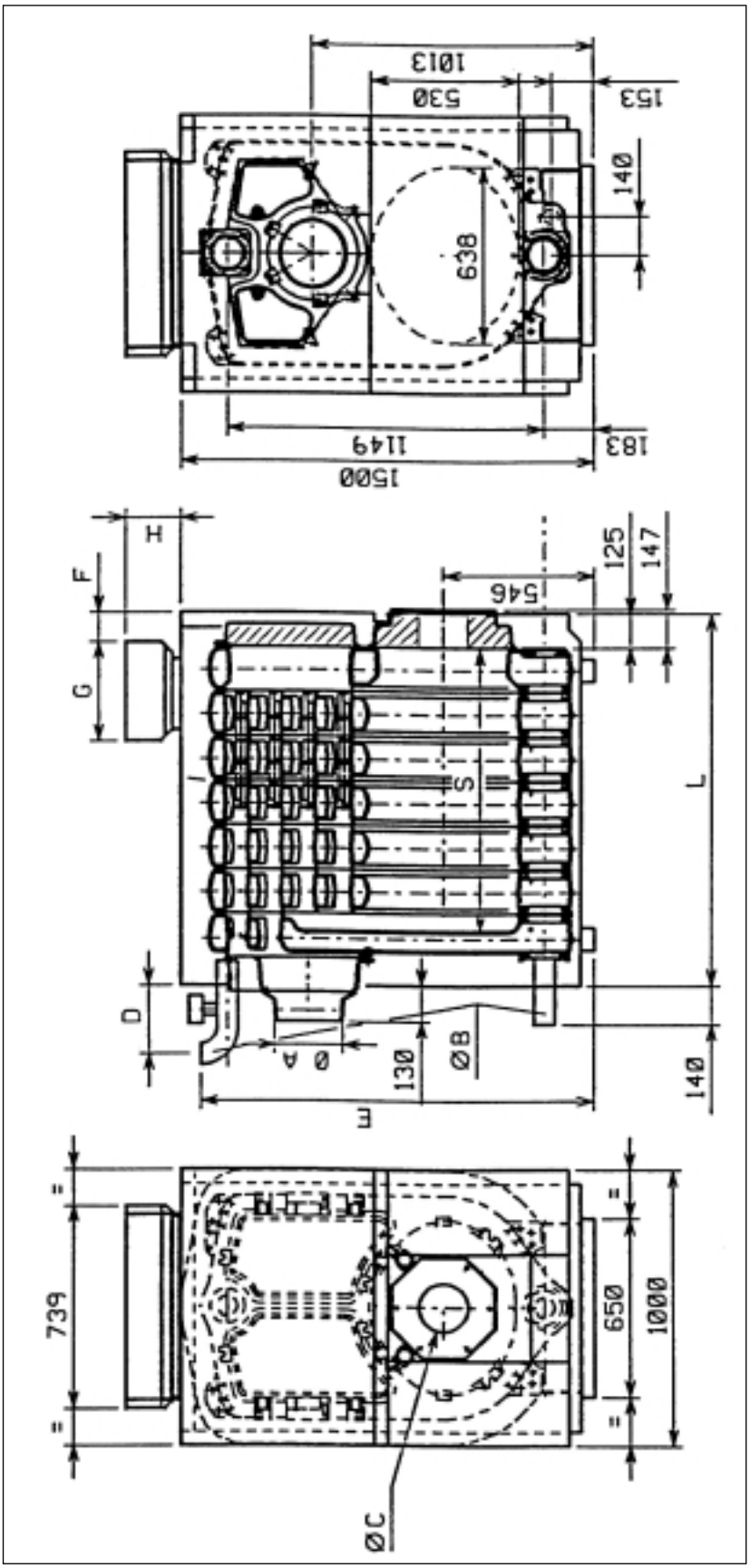

Effective Ø combustion chamber:

- Front section: 445mm
- Interm section: 530mm

Boiler Size		Viceroy 8	Viceroy 9	Viceroy 10	Viceroy 11	Viceroy 12	Viceroy 13	Viceroy 14
Ø A out.		250	250	250	300	300	300	300
Ø B		2 1/2"	2 1/2"	2 1/2"	3"	3"	3"	3"
Ø C		Ø 135, 175, 190, 240, 250, 290 * ou plaque pleine						
D		235	235	235	254	254	254	254
E		1427	1427	1427	1447	1447	1447	1447
E Control Panel + Diematic	F	107,5	107,5	107,5	107,5	107,5	107,5	107,5
	G	355	355	355	355	355	355	355
	H	195	195	195	195	195	195	195
Standard Control Panel	F	127,5	127,5	127,5	127,5	127,5	127,5	127,5
	G	130	130	130	130	130	130	130
	H	105	105	105	105	105	105	105
L		1505	1665	1825	1985	2145	2305	2465
S		1183	1343	1503	1663	1823	1983	2143

ASSEMBLY VICEROY GT

Tools necessary:

- 1 12mm Allen key
- 1 cross head screw driver
- 1 13, 19 and 24mm flat spanner
- 1 22mm tubular hexagon box spanner
- 1 stanley knife
- 1 “JD-TE” assembly tool

For **boilers delivered with the body assembled** begin at figure **15.**

To fit the sections, proceed in the following order:

- fit the rear section
- fit the special intermediate section
- fit all of the normal intermediate sections
- fit the front section

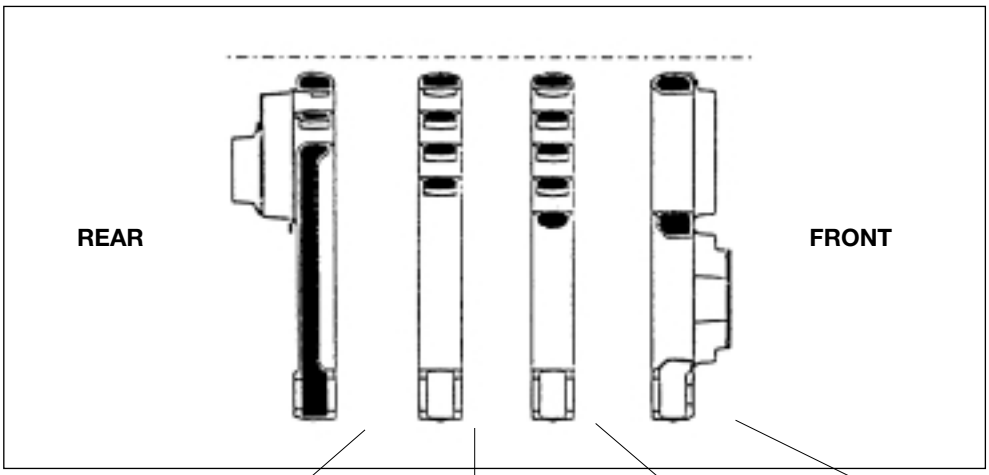

Boiler	Rear Section n° 8229-0003	Special Intermediate Section 8229-0005	Normal Intermediate Section 8229-0001	Front Section 8229-0002
GT 8	1	1	5	1
GT 9	1	1	6	1
GT 10	1	1	7	1
GT 11	1	1	8	1
GT 12	1	1	9	1
GT 13	1	1	10	1
GT 14	1	1	11	1

1

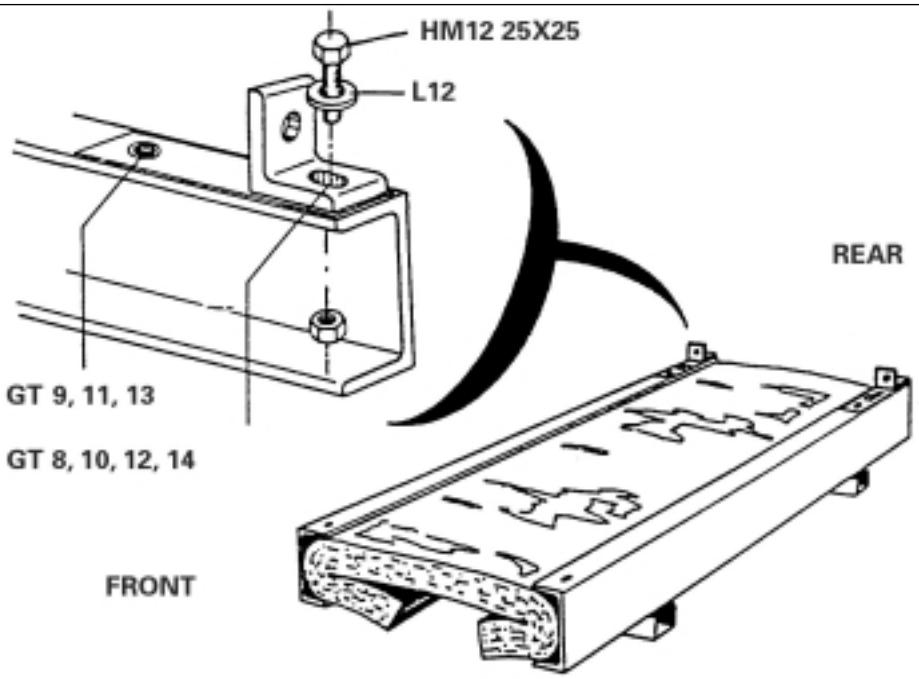

8229-EN-11 A

Fit the 2 rear attachment brackets (in the body accessories pack) and attach them onto the framework using 2 bolts HM 12x25/25 + 4 washers L 12 and 2 nuts HM 12.

Caution: use the corresponding holes according to the indications on the framework.

Put the lower insulation in place (fabric to top) packs IE 51 to IE 57. Adapt length if necessary or bend the lower insulation after the casing has been completely assembled.

2

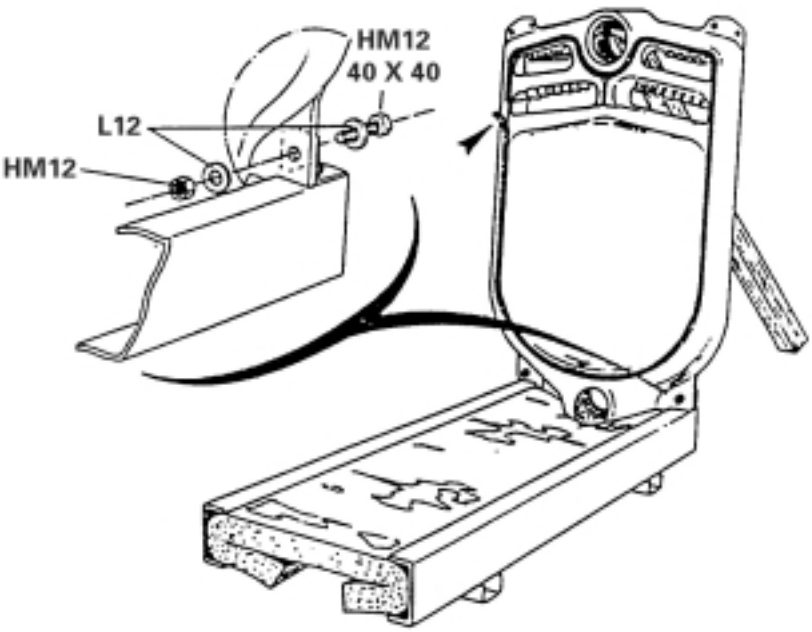

8229-EN-12 A

Establish the location of the framework depending on the direction in which the burner door will be opened and the length of the burner.

Put the rear section on the framework and support it. Attach it at the brackets using 2 bolts HM 12x40/40 + 4 washers L 12 + 2 nuts HM 12.

Carefully put the thermocord in place (**body accessories** pack) in the sealing groove.

Note: Do not pull on the cord when it is being put in, to avoid stretching and to preserve its thickness.

3

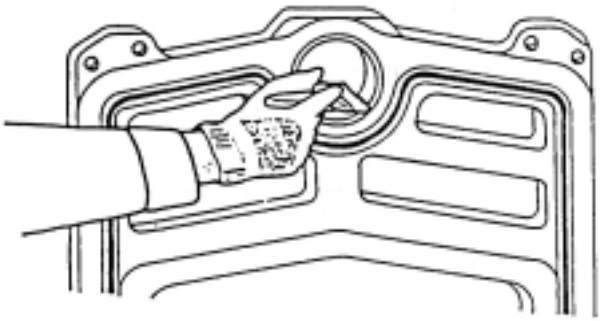

8229-EN-13

Clean the bores and nipples with a diluent (body accessories pack). Coat them with the lubricant supplied with the sections.

4

8199-EN-36

Drive in the 2 nipples gently.

5

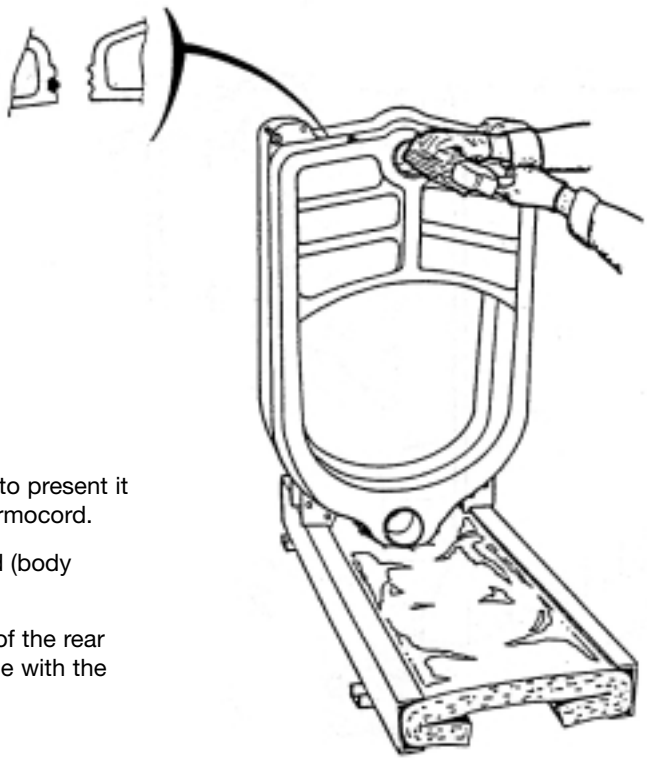

8229-EN-55

Place the special intermediate section, taking care to present it the correct way: the sealing groove against the thermocord.

For reasons of safety, insert an upper assembly rod (body accessories pack) into the holes of the 2 sections.

Gently and at the same time drive in the 2 nipples of the rear section using a hammer and a piece of wood, in line with the bores.

6

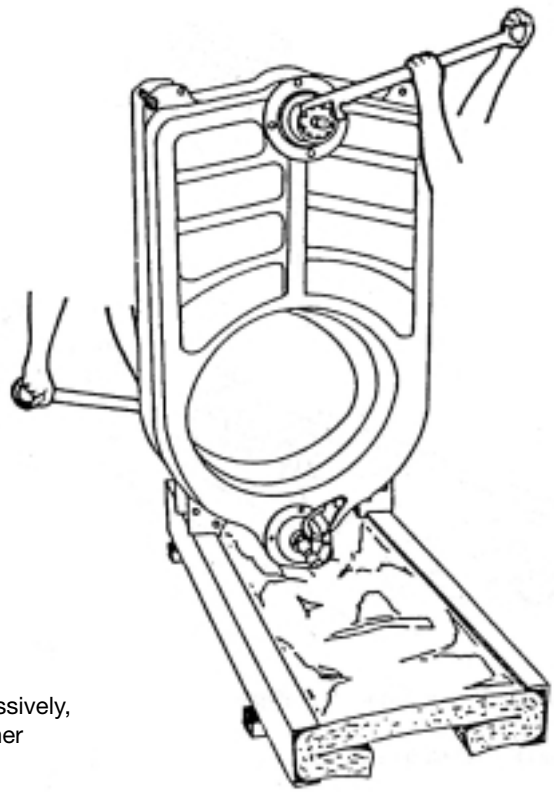

8229-EN-16

Put the special assembly tool in place. Tighten progressively, so as to bring the upper and lower connections together equally and at the same time.

7

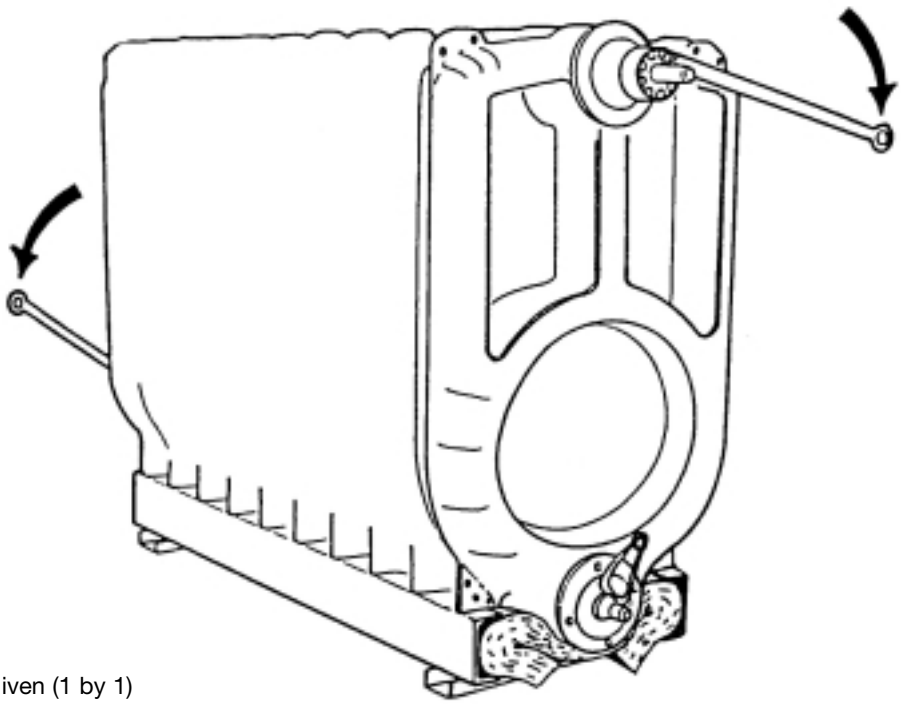

8229-EN-17 B

Fit the remaining sections in the order given (1 by 1) proceeding as per figures 3, 4, 5 and 6. Leave the assembly tool in place.

8

Fitting the assembly rods and upper casing supports

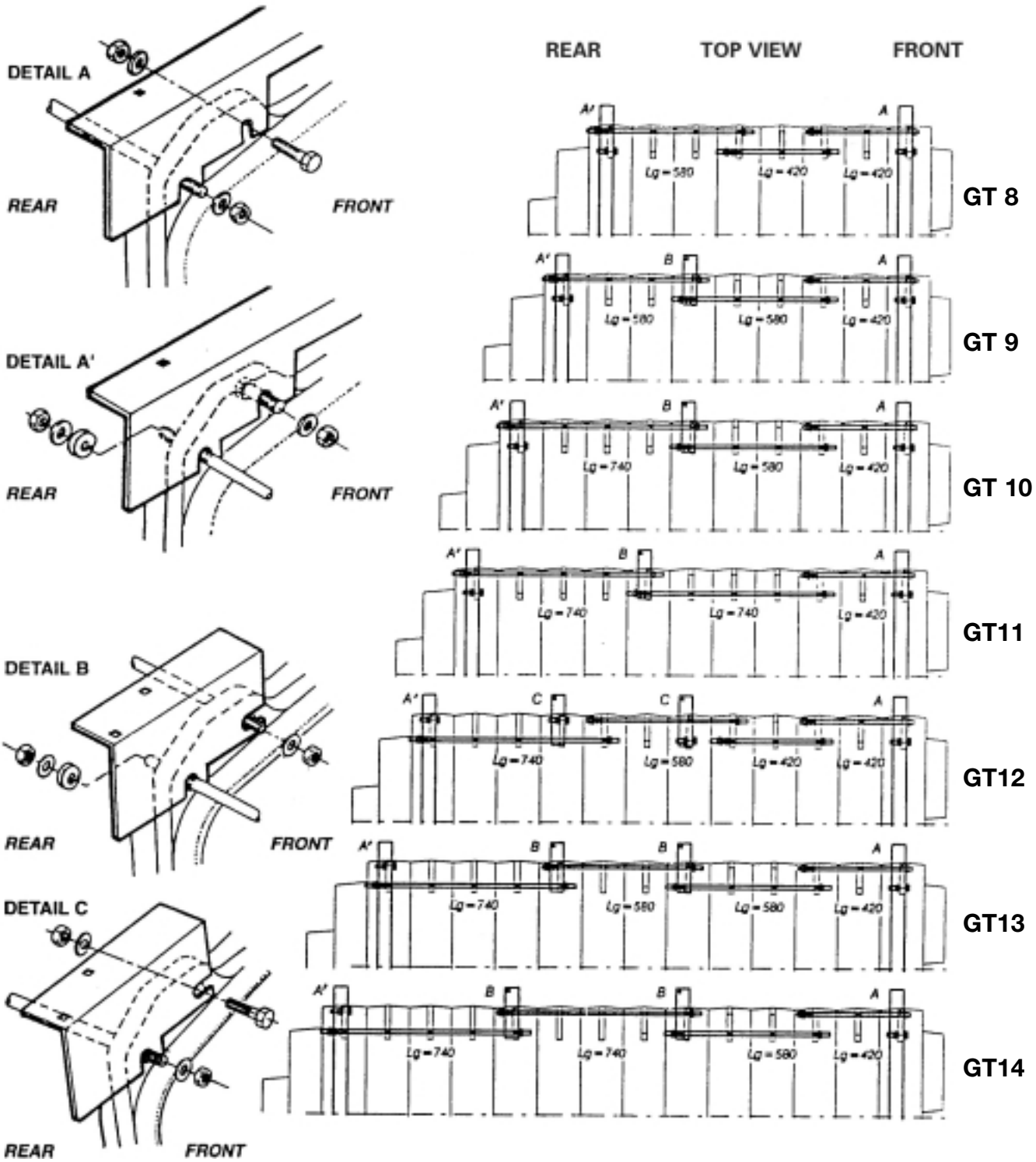

Fit the upper assembly rods (body accessories pack) in the order given in the figure above. Place the expansion spring and its washer on each rod towards the rear. Stop tightening the nuts when the free space between the threads is about 2 mm.

Fix the upper casing supports (pack IE 13) and the upper crosspieces (packs IE 10, 11, 12, 14) with the assembly rods. (body accessories pack) as shown in details A, A', B & C.

Fit the lower assembly rods in the order given in the figure.

Remove the assembly tool.

9

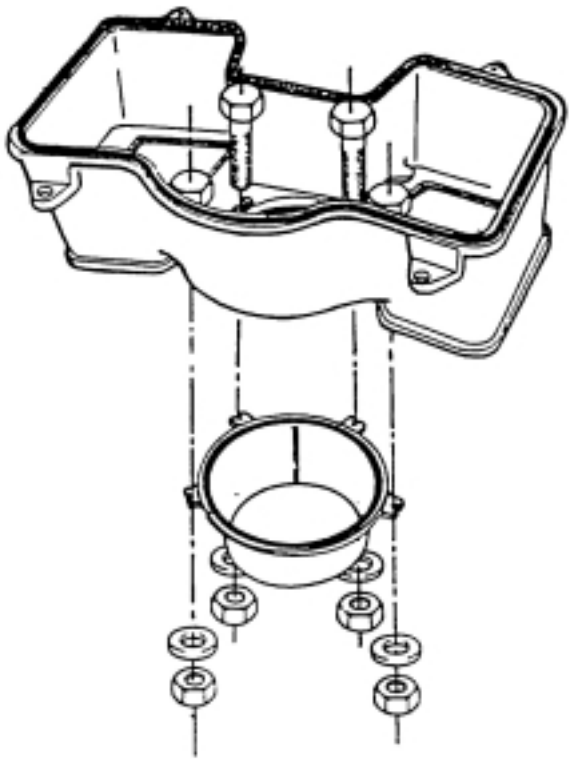

8229-EN-25 B

Fix the flue nozzle (body accessories pack) using the 4 bolts HM 12x40 + 4 nuts H 12 and 4 washers on the flue outlet (pack CS 20)

10

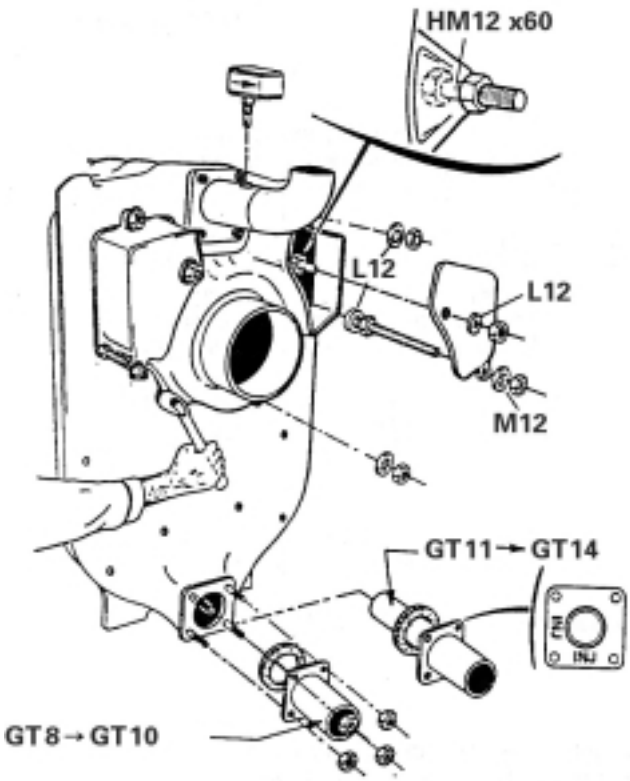

8229-EN-26 B

Using a pipe wrench, fit the 2 threaded rods (body accessory pack) M 12x175 for the flue outlet.

Fix the outlet and return flanges (body accessories pack) using 4 nuts H 19 for each flange (24mm spanner) and place the gasket between them. For the GT 11 to 14 models, the return flange is replaced by a flange with water balancing tube.

Fit the flue outlet onto the heating body (6 nuts H 12+6 flat washers L 12-19mm spanner).

Fit 2 bolts HM 12x60 + 2 nuts on the flue outlet for the cleaning traps (see detail).

Attach the cleaning traps (pack IE 20) using 4 bolts H 12 + 2 washers L 12 and 2 washers M 12.

Screw the flow rate controller on the sleeve. The direction of the arrow on the casing must correspond to the direction of the water flow in the pipework.

11

8229-EN-18 C

Fit the lower and upper plugs with the small pocket (body accessory pack). Do not forget the hemp.

Using a pipe wrench, put the 8 M 12x50 studs in place for the cleaning doors and the burner door and the 2 M 12x85 studs for the hinges of the sweeping doors.

Fit the hinges for the sweeping doors (pack IE 20) using 2 bolts HM 12x25 + 2 nuts M 12 + 2 washers DE 12.

Fit the combustion chamber door hinge (body accessories pack) on the left or the right according to the direction in which the door will be opened, and fix using 3 bolts HM 12x30 + washers CL 14.

Fix the guide flap (body accessories pack) using 2 bolts HM 12x25 + 2 washers CL 14.

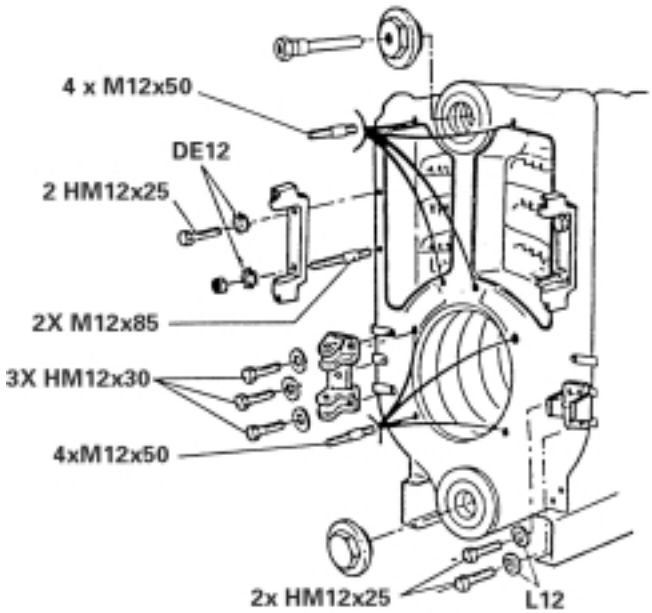

12

8229-EN-20 A

Body accessories pack

Fit the burner door (4 M 12 nuts + washers CL 14).

Fit the hinge mounted on its pin.

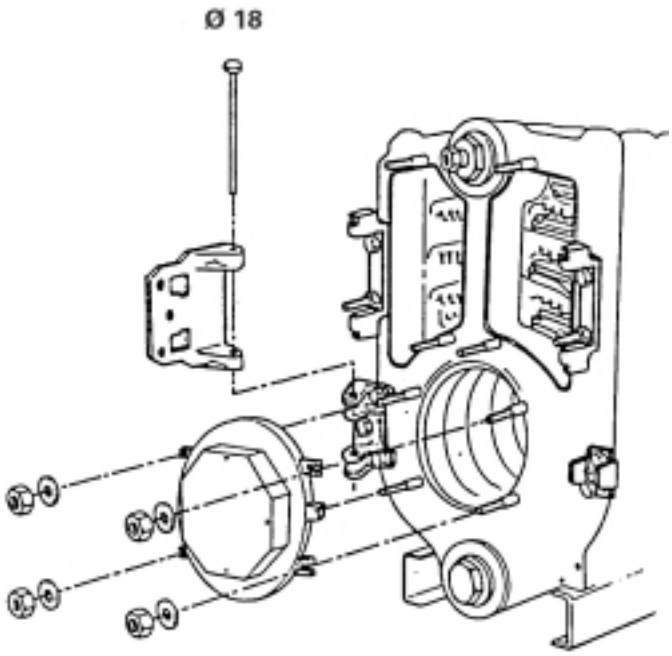

13

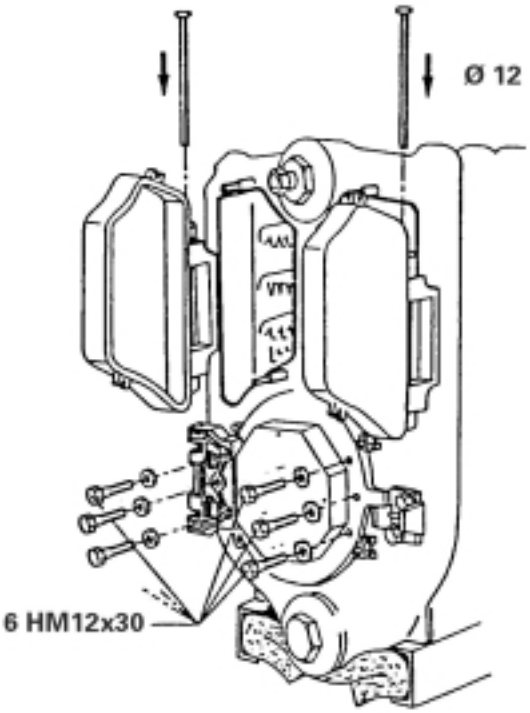

8229-EN-21 A

Fit the hinge (body accessories pack) on the burner door using the 3 bolts HM 12x30 + 3 washers L 12 (previously removed). Leave the 3 bolts HM 12x30 + 3 washers L 12 on the burner door in place on the opposite side to the hinge.

Fit the left and right hand sweeping doors in place with their pin (pack IE 20).

14

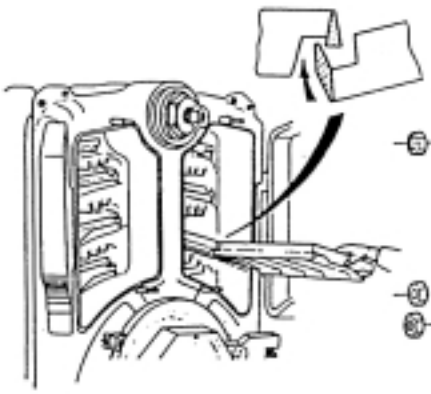

8229-EN-22

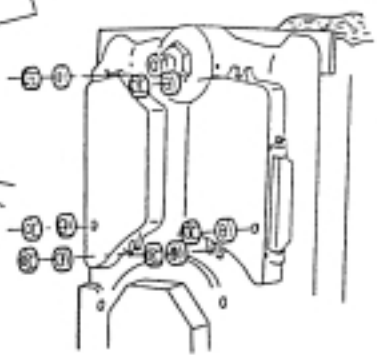

8229-EN-51

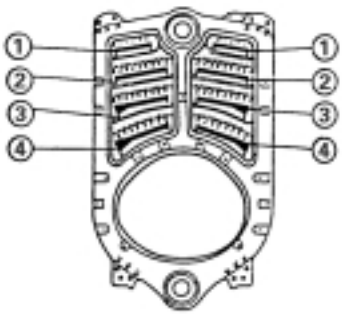

8229-EN-28

Baffles (by flue way)	Viceroy GT 8 pack CS30	Viceroy GT 9-10 pack CS31	Viceroy GT 11-12 pack CS32	Viceroy GT 13-14 pack CS33
Upper (1)	8229-0010 then 8229-0022	2x 8229-0010	2x8229-0010 then 1x8229-0022	3x 8229-0010
Middle (2)	8229-0011 then 8229-0023	2x 8229-0011	2x8229-0011 then 1x8229-0023	3x 8229-0011
Lower (3) + (4)	8229-0012 then 8229-0024	2x 8229-0012	2x8229-0012 then 1x8229-0024	3x 8229-0012

Remark: The part number of the baffles is marked on the casting.

Install the upper (1), middle (2) and lower (3) + (4) baffles, respecting the sequence of assembly given in the chart.

Important: Interlock the baffles one into another before placing them in the flue way.

Close the cleaning doors and fix with 3 HM12 nuts + 3 L12 washers. After the body assembly, the installer must test the pressure at a equal to 1.5 x the service pressure.

15

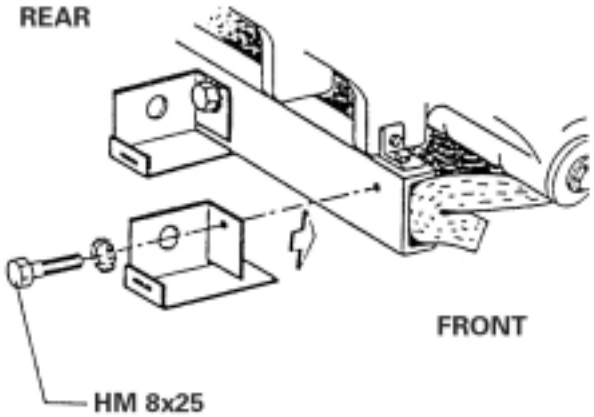

8229-EN-23

Body delivered pre-assembled only: IMPORTANT

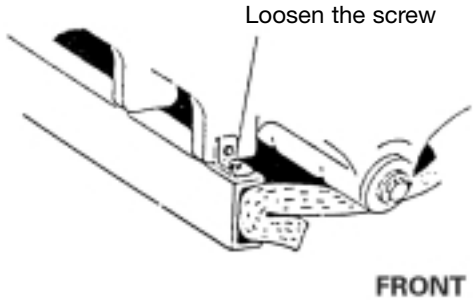

8229-EN-50 A

Fix the lower casing supports (pack IE 10 to IE 14) on the framework using 1 bolt HM 8x25 + lock washer for each support.

16

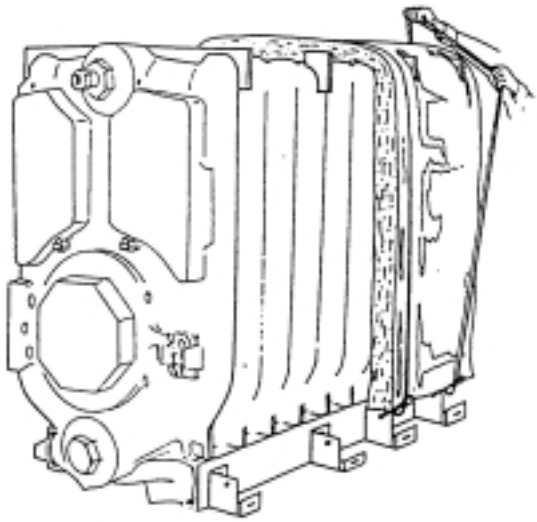

8229-EN-24 A

Fit the body insulation panels. Bear up the insulation by tying each strap to the lower casing support at each side of the boiler.

Boiler	Body insulation width				
	Front ←				→ Rear
	500	500	600	800	900
Viceroy GT 8	1				1
Viceroy GT 9	1	1	1		
Viceroy GT 10	1	1		1	
Viceroy GT 11	1	1			1
Viceroy GT 12	1	2	1		
Viceroy GT 13	1	2		1	
Viceroy GT 14	1	2			1
Pack	IE10	IE13	IE14	IE11	IE12

17

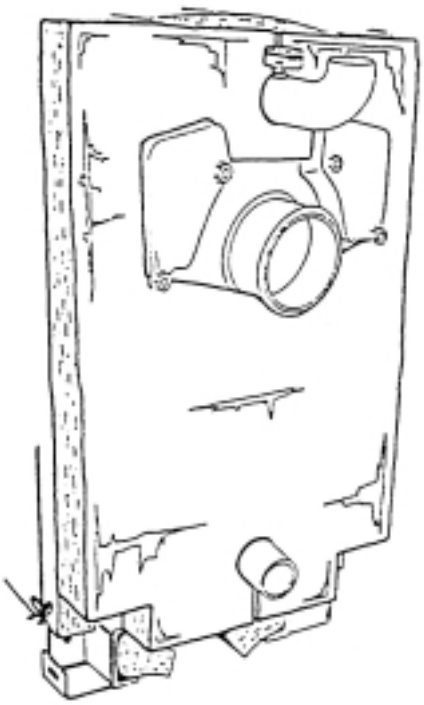

8229-EN-30 A

Fit the rear insulation (pack IE 10)

18

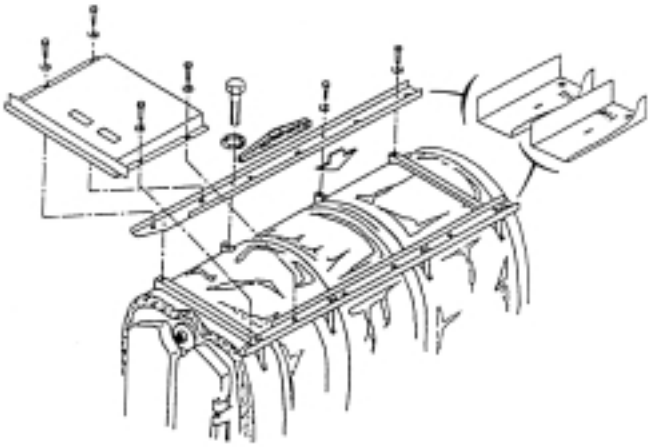

8229-EN-29 A

Pack IE 41 to IE 47:

Fit the left and right wiring ducts, respecting the assembly direction and attach each casing support (1 bolt HM 5x12 + 1 lock washer) and the cross pieces (2 bolts HM 5 x 12 + lock washer).

Fit the front top panel (pack IE 10) and fix on the wiring ducts using 4 bolts HM 5x12 + lock washers.

19

Standard control panel

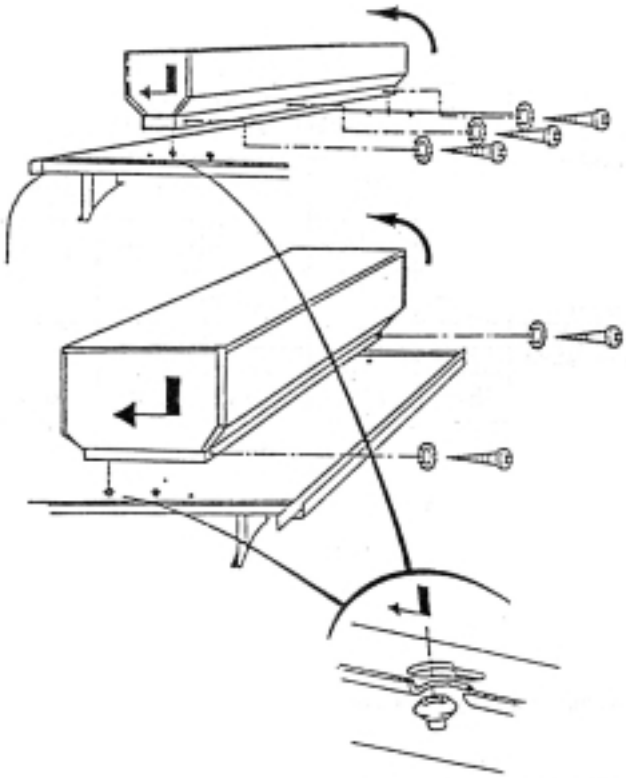

Deluxe control panel

8229-EN-32

Position the control in the slots (rear slots for the DELUXE control panel, front for the standard control panel).

Open the control panel: 2 self tapping screws at the front for Deluxe control panel, or 3 screws at the back for the standard control panel.

20

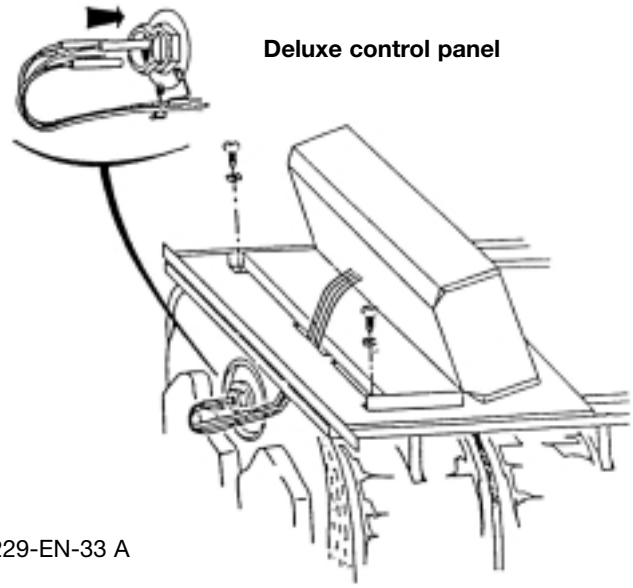

8229-EN-33 A

Screw the control panel at the front on the top panel using 2 self tapping screws dia. 3.94x12.7 + lock washers.

Carefully unwind and remove the various bulbs of the control panel by passing them through the orifice of the front top cover. Insert them into the small pocket and maintain them there using a spring.

21

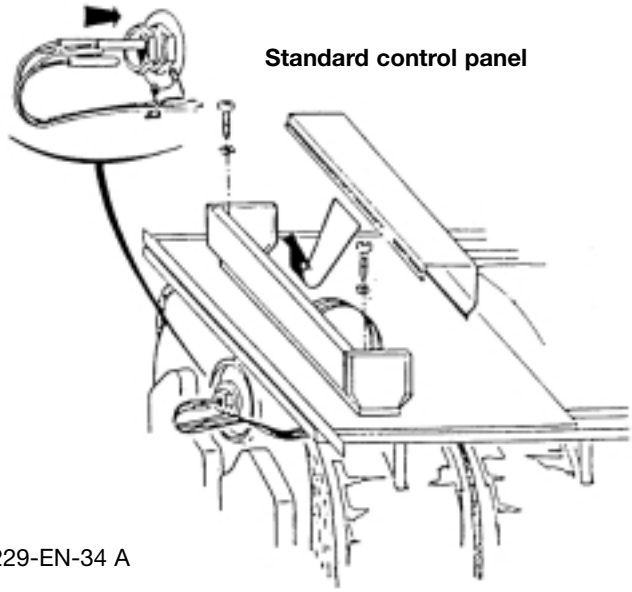

8229-EN-34 A

Fix the control panel at the rear, on the top panel using 2 self tapping screws dia. 3.94x25 + lock washers.

Carefully unwind and remove the various bulbs of the control panel by passing them through the orifice of the front top cover. Insert them into the small pocket and maintain them there using a spring.

22

Electrical connections

Make the electrical connections on the two terminal blocks provided for this purpose inside the control panel

See chapter 7 of the instructions for the Standard and E control panels or the instructions particular to the DIEMATIC control panel. Close the control panel (2 self tapping screws + lock washers).

23

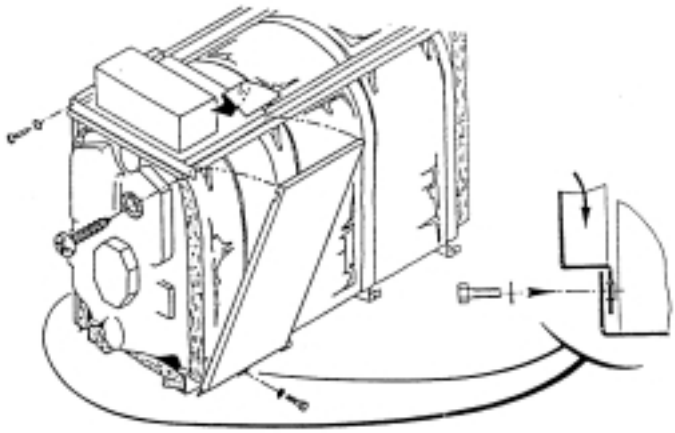

8229-EN-35 A

Position the front side panels (length 520) in the lower casing supports, then attach them in the wiring ducts.

Fix at the front onto the lower casing supports using 2 bolts HM 5x12 + lock washers and at the front top panel using 2 screws dia. 3.94x12.7 + lock washers.

24

Boiler	Body insulation width			
	Front ←			→ Rear
Viceroy GT 8	520(IE10)	930(IE12)		
Viceroy GT 9	520(IE10)	480(IE13)	610(IE14)	
Viceroy GT 10	520(IE10)	480(IE13)	770(IE11)	
Viceroy GT 11	520(IE10)	480(IE13)	930(IE12)	
Viceroy GT 12	520(IE10)	480(IE13)	480(IE13)	610(IE14)
Viceroy GT 13	520(IE10)	480(IE13)	480(IE13)	770(IE11)
Viceroy GT 14	520(IE10)	480(IE13)	480(IE13)	930(IE12)

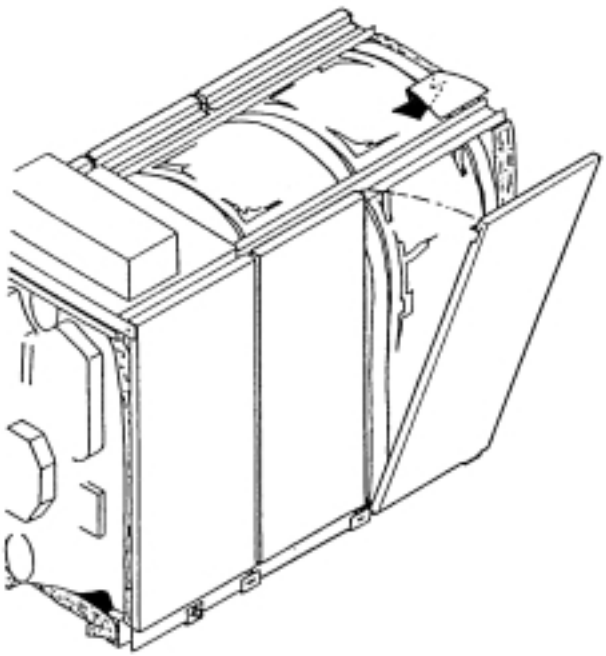

8229-EN-36

Fit the remaining side panels in the order given in the table: position each panel in the lower casing supports then attach it in the wiring duct.

25

Boiler	Front Top Panel	Intermediate Top Panel			Rear Top Panel	Pack
Viceroy GT 8	480(IE10)	480			490	IE12
Viceroy GT 9	480(IE10)	480	480		170	IE13 + IE14
Viceroy GT 10	480(IE10)	480	480		330	IE11 + IE13
Viceroy GT 11	480(IE10)	480	480		490	IE12 + IE13
Viceroy GT 12	480(IE10)	480	480	480	170	IE14 + IE13
Viceroy GT 13	480(IE10)	480	480	480	330	IE11 + IE13
Viceroy GT 14	480(IE10)	480	480	480	490	IE12 + IE13

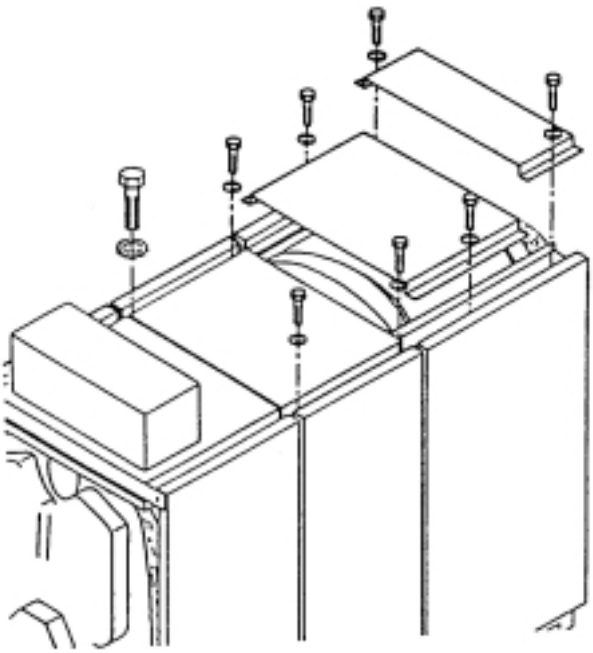

8229-EN-37

Fix the top covers from front to rear in the order given in the table.

Fix the first intermediate top cover (length 480) onto the wiring duct using 4 bolts HM 5x12 + lock washers.

Fix the remaining top covers onto the wiring duct using 2 bolts 5x12 + lock washers.

26

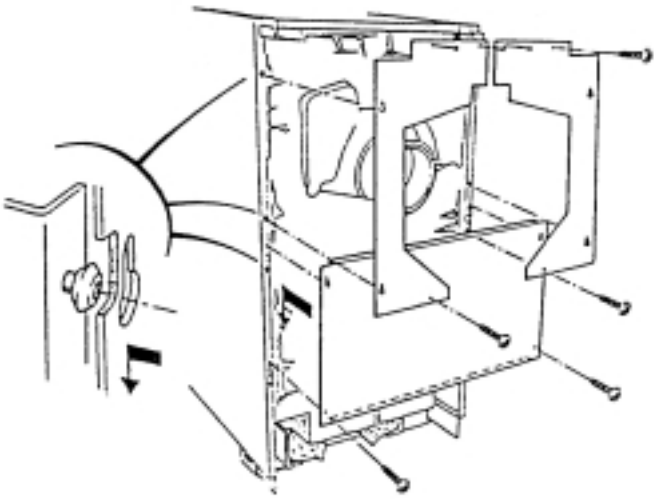

8229-EN-38

Fitting the rear panels (pack CS10)

Hook the lower rear panel on the two slots and fix onto the side panels using 2 self tapping screws dia. 3.94x12.7 + lock washer.

Hook the left and right upper rear panels on the two slots and fix onto the lower rear panel using 1 self tapping screw dia 3.94x12.7 + lock washer and onto the rear top cover using 2 self tapping screws dia. 3.94x12.7 + lock washers.

27

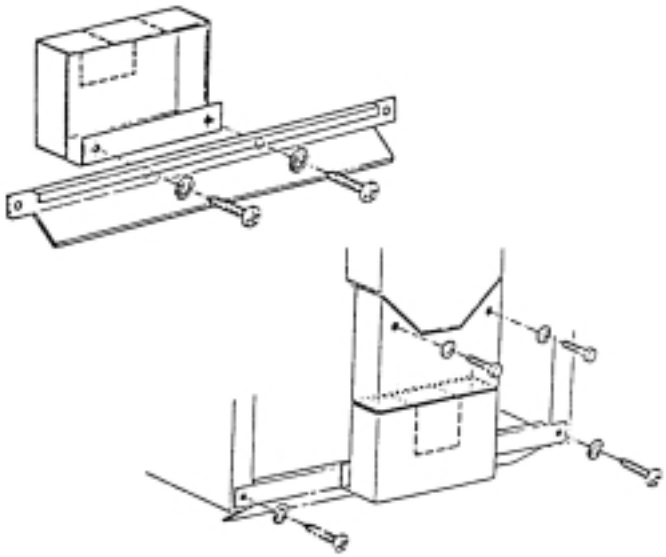

8229-EN-39

Pack CS10

Fit the lower front panel onto the crosspiece (2 screws dia. 3.94x12.7 + lock washers).

Fit the lower crosspiece and fix onto the side panels using 2 self tapping screws dia 3.94x12.7 + lock washers

Fit the burner's upper front panel onto the burner door and fix it using 2 bolts HM 12x25 + flat washers.

28

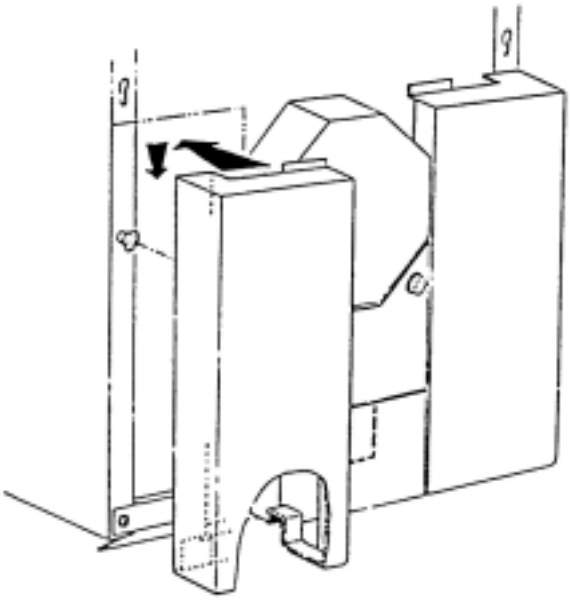

8229-EN-40

Pack IE10

Hook the left and right lower front panels on the side panel slots.

Hook the front casing support (2 slots)

Position the upper front cover in the front casing support, and hook it in the front top cover.

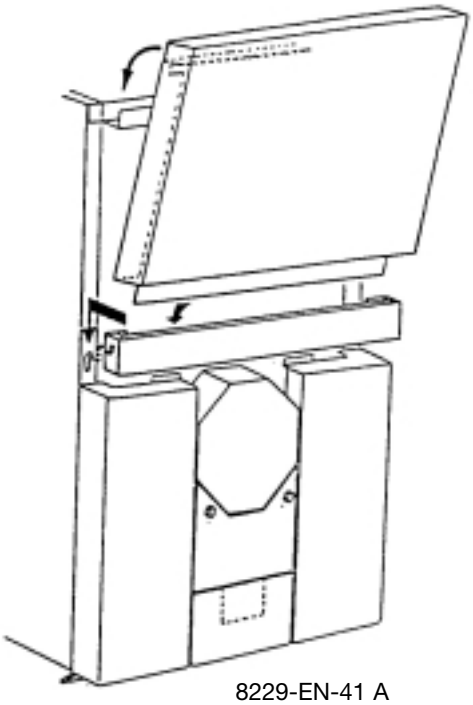

8229-EN-41 A

Standard Control Panel
Viceroy GT

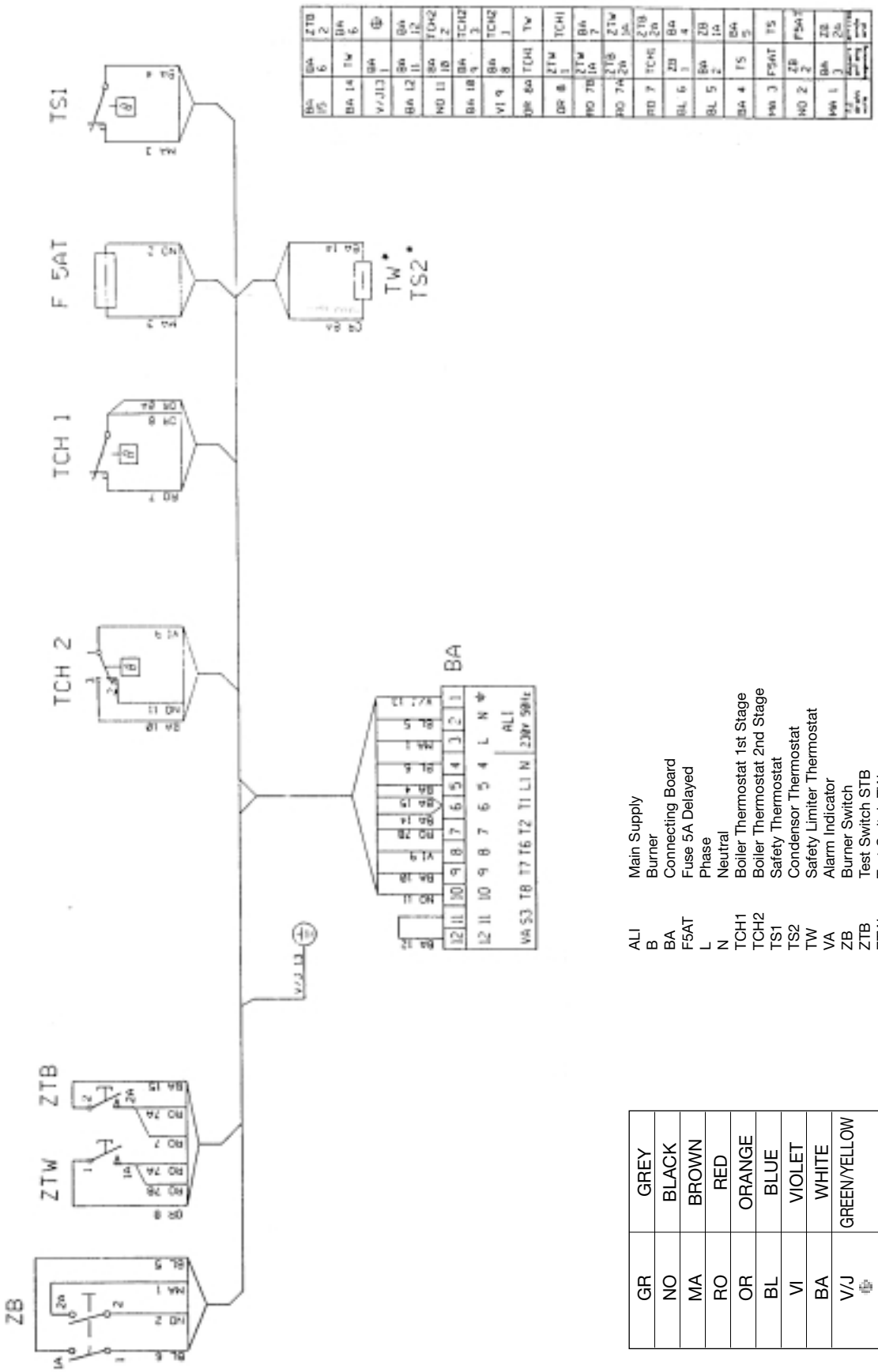

ALI	Main Supply
B	Burner
BA	Connecting Board
F5AT	Fuse 5A Delayed
L	Phase
N	Neutral
TCH1	Boiler Thermostat 1st Stage
TCH2	Boiler Thermostat 2nd Stage
TS1	Safety Thermostat
TS2	Condensor Thermostat
TW	Safety Limiter Thermostat
VA	Alarm Indicator
ZB	Burner Switch
ZTB	Test Switch STB
ZTW	Test Switch TW
*	Optional Delivered
⏚	Earth

GR	GREY
NO	BLACK
MA	BROWN
RO	RED
OR	ORANGE
BL	BLUE
VI	VIOLET
BA	WHITE
V/J ⏚	GREEN/YELLOW

Deluxe Control Panel
Viceroy GT

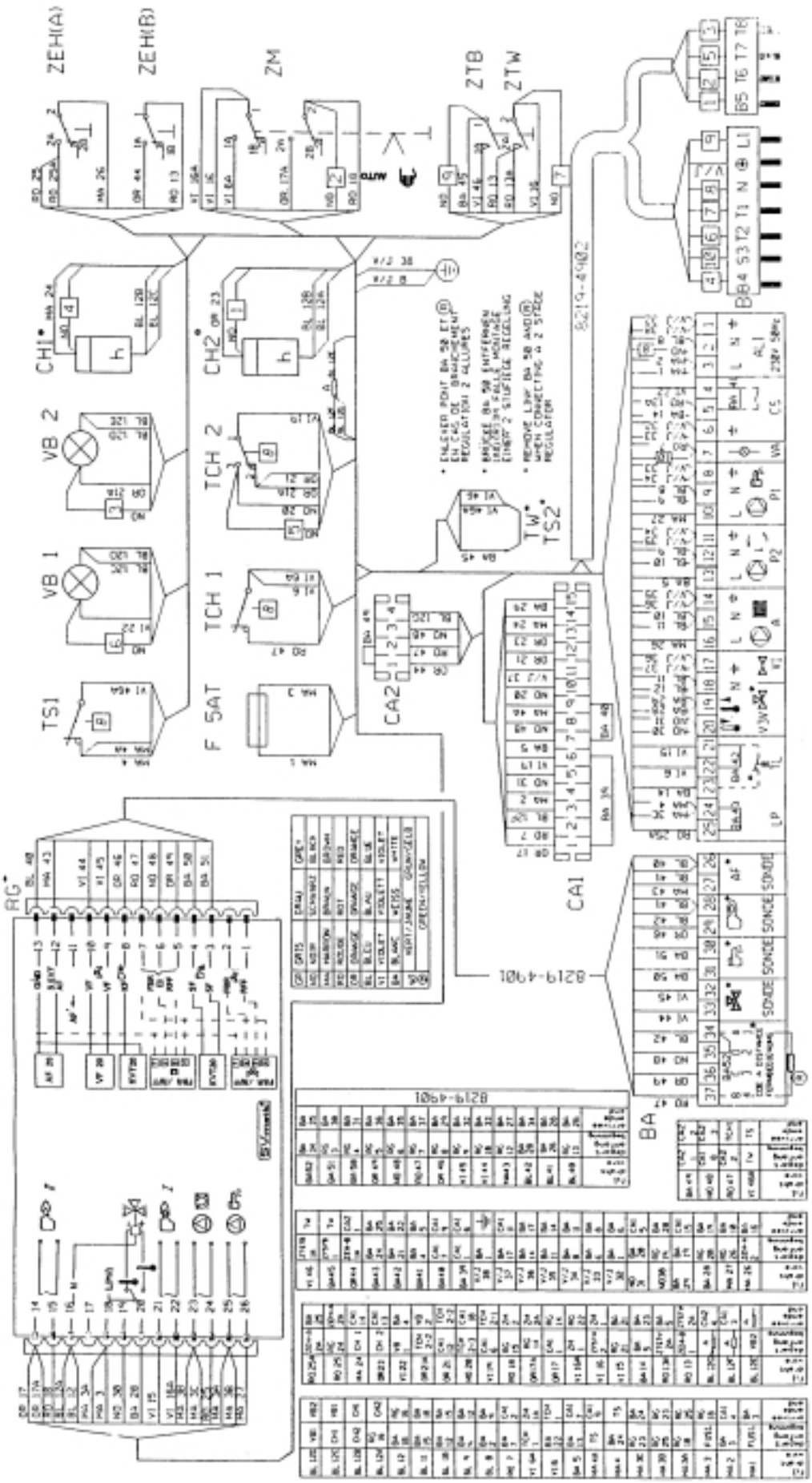

A	Heating Pump	LP	Pump Logic	VB2	On/off indicator 2nd Stage
ALI	Main Supply	N	Neutral	V3V	Three Way Valve
BA	Connecting Board	P1	Load Pump	V1	Gate Valve
B	Burner	P2	Shunt Pump	ZEH(A)	Summer-Winter Switch
CA1	Cascade connection 1	R	Resistance 1430	ZEH(B)	Heating Pump
CA2	Cascade connection 2	RG	Regulator	ZM	Summer-Winter Switch Burner
CH1	Hour run meter 1st stage	TCH1	Boiler Thermostat 1st Stage	ZTB	Heating Pump
CH2	Hour run meter 2nd stage	TCH2	Boiler Thermostat 2nd Stage	ZTW	Manual Mode Switch
CS	Safety Contact	TL	Limiter Thermostat	?	Test Switch STB
DE	Decoupling	TS1	Safety Thermostat	?	Test Switch TW
ECS	Domestic hot water	TS2	Condensor Thermostat		Earth
F5AT	Fuse 5A Delayed	VA	Alarm Indicator		Optional Delivered
L	Phase	VB1	On/off indicator 1st Stage		

Deluxe Control Panel Burner Connection

The Burner Control circuit is fitted with 2 standard European connector-plugs and can be directly to the burners, fitted with connector-sockets. In the case of a burner not fitted with sockets, remove the plugs on the burner cable from the boiler and connect the leads to the terminal bar on the burner, proceeding as follows:

No.(9) [1] Control circuit phase interrupted in panel by safety Thermostat TS, Limit Thermostat TS and panel ON/OFF switch ZG. Connect to control circuit live terminal burner.

NOTE: The connection terminal for this control phase must be separate from those of the power supply phase(s) which are wired direct to the burner via the installer supplied burner mains relay.

No.(8) [N] Neutral from control panel interrupted by panel ON/OFF switch. Connect to Neutral terminal of burner control box.

No.(7) T1 Live feed from burner control circuit downstream of burner ON/OFF switch. Connect to live side of first stage control thermostat (High temperature setting).

No.(6) T2 Return from 1st stage control thermostat (High temperature setting). Live on this lead, hence on T2 allows burner to fire on low fire in a 2 stage burner.

No.(10) S3 Burner lock indicator. Feeds signal from lockout terminal on burner control box to lock out indicator on boiler control panel.

No.(4) B4 Feed to 1st stage operating indicator from low fire control. Indicates low fire in operation. essentially feed back from live on No.(6) T2.

No.(2) T6 Live feed from burner control circuit downstream of burner ON/OFF switch. Connects to live side of 2nd stage control thermostat (Low setting thermostat).

No.(3) T8 Return from 2nd stage control thermostat (Low temperature setting). Live on this lead, hence on T8 allows burner to fire on high fire in a 2 stage burner.

No.(5) T7 Back contact from 2nd stage control thermostat (Low temperature setting). Live on this lead, hence T7 indicates high fire out of operation (used for modulating burners only)

No.(1) B5 Feed to 2nd stage operating indicator from burner high fire control to boiler panel. Indicates high fire in operation. Essentially feed back from live on No.(3) T8.

g/y Earth

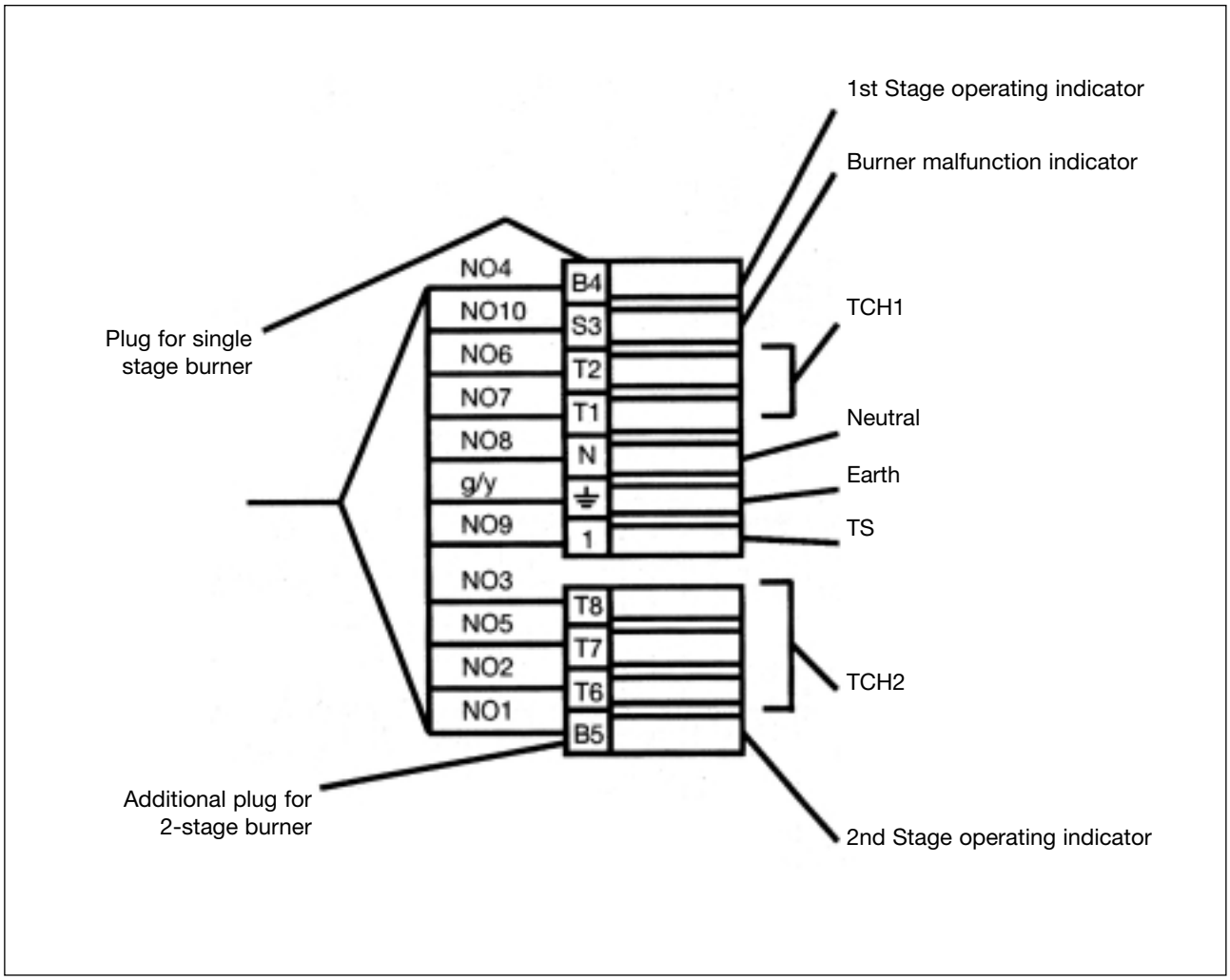

Technical Training

The Caradon Plumbing Limited Technical Training Centre offers a series of first class training courses for domestic, commercial and industrial heating installers, engineers and system specifiers. For details of courses please ring:

.....01482 498432

Caradon Plumbing Limited pursues a policy of continuing improvement in the design and performance of its products. The right is therefore reserved to vary specification without notice.

September 2001 AO **09/52**

PO Box 103
National Avenue
Kingston upon Hull
HU5 4JN
Telephone 01482 492251
Facsimile 01482 448858

Registration No. 4049093
Registered Office
Kelburn House
7-19 Mosley Street
Newcastle Upon Tyne
NE1 1YE

Commercial Heating Technical Helpline 01482 498376

Caradon
Plumbing Limited